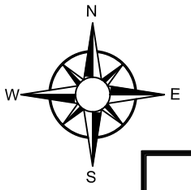

1 A-1 PERSPECTIVE
SCALE NTS.

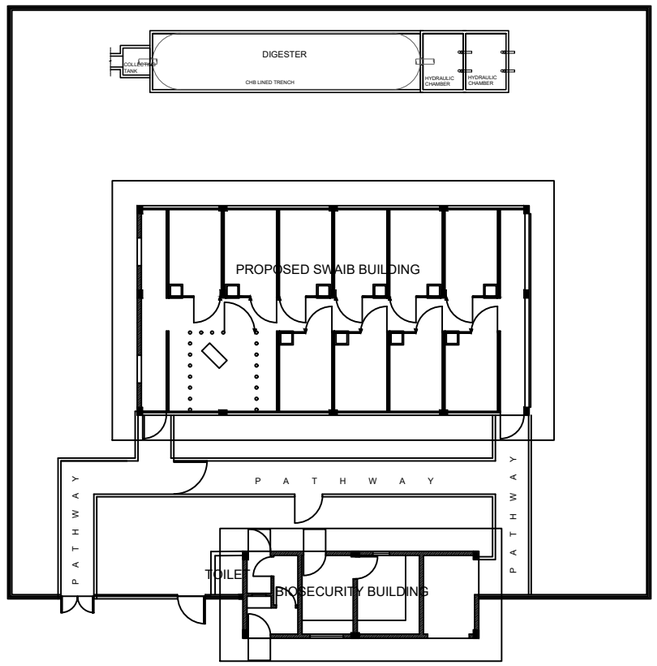

2 A-1 SITE DEVELOPMENT PLAN
SCALE 1:125 M.

3 A-1 VICINITY MAP
SCALE NTS.

TABLE OF CONTENTS

COVER SHEET A1
- PERSPECTIVE
- SITE DEVELOPMENT PLAN
- VICINITY MAP

ARCHITECTURAL A2
- GROUND FLOOR PLAN
- FRONT ELEVATION
- LEFT ELEVATION
- RIGHT ELEVATION
- REAR ELEVATION
- CROSS SECTION
- LONGITUDINAL SECTION

ARCHITECTURAL A3
- ROOF LAYING PLAN
- CROSS SECTION DETAIL
- GATE DETAIL

ARCHITECTURAL A4
- BIO-SECURITY FLOOR PLAN
- BIO-SECURITY ROOF PLAN
- FRONT ELEVATION
- LEFT ELEVATION
- RIGHT ELEVATION
- REAR ELEVATION
- CROSS SECTION
- LONGITUDINAL SECTION

STRUCTURAL S1
- FOUNDATION PLAN
- ROOF FRAMING PLAN
- CEILING JOIST
- BAY SECTION
- ROOF BEAM DETAILS
- COLUMN AND FOOTING DETAIL
- TRUSS DETAIL
- WALL FOOTING DETAIL

STRUCTURAL S2
- FOUNDATION PLAN
- ROOF FRAMING PLAN
- ROOF BEAM DETAILS
- TRUSS DETAILS
- COLUMN AND FOOING DETAILS

ELECTRICAL E1
- LIGHTING LAYOUT PLAN
- POWER LAYOUT PLAN
- SCHEDULE OF LOADS
- GENERAL NOTES & SPECIFICATIONS
- LEGEND & SYMBOLS
- RISER DIAGRAM
- TYPICAL PANEL BOX DETAIL
- SERVICE ENTRANCE MOUNTING DETAIL

SANITARY P1
- WATERLINE PLUMBING LAYOUT
- SEWERLINE PLUMBING LAYOUT
- CANAL DETAILS

SANITARY P2
- SEWERLINE PLUMBING LAYOUT
- ISOMETRIC PLUMBING LAYOUT
- SEPTIC TANK DETAILS

SANITARY P3
- DIGESTER DETAILS

REPUBLIC OF THE PHILIPPINES
DEPARTMENT OF PUBLIC WORKS
TRANSPORTATION AND COMMUNICATION

CITY MAYOR

LAND USE AND ZONING

LINE AND GRADE

ARCHITECTURAL

STRUCTURAL

SANITARY

ELECTRICAL

ELECTRONICS

THESE DRAWINGS ARE THE SOLE PROPERTY OF THE ARCHITECT. NO COPIES, SIMILAR REPRODUCTIONS, ALTERATIONS AND/OR REVISIONS OF ANY KIND ARE TO BE DONE, IN PART OR IN WHOLE TO ANY OF THESE DOCUMENTS, W/O CONSENT FROM THE ARCHITECT.

ENGINEEER	PRC. NO.	PROJECT TITLE	OWNER	APPROVED BY	APPROVED BY	NO.	REVISIONS	DATE	SHEET CONTENT	PROJECT NO.
		Swine AI Sa Barangay (SWAIB) Project			DR. JAYVEE BRYAN G. CARILLO CENTER DIRECTOR ATI - RTC 1				AS SHOWN	SHEET NO. A 1
PTR. NO.	DATE	LOCATION :	ADDRESS :							
TIN	PLACE									

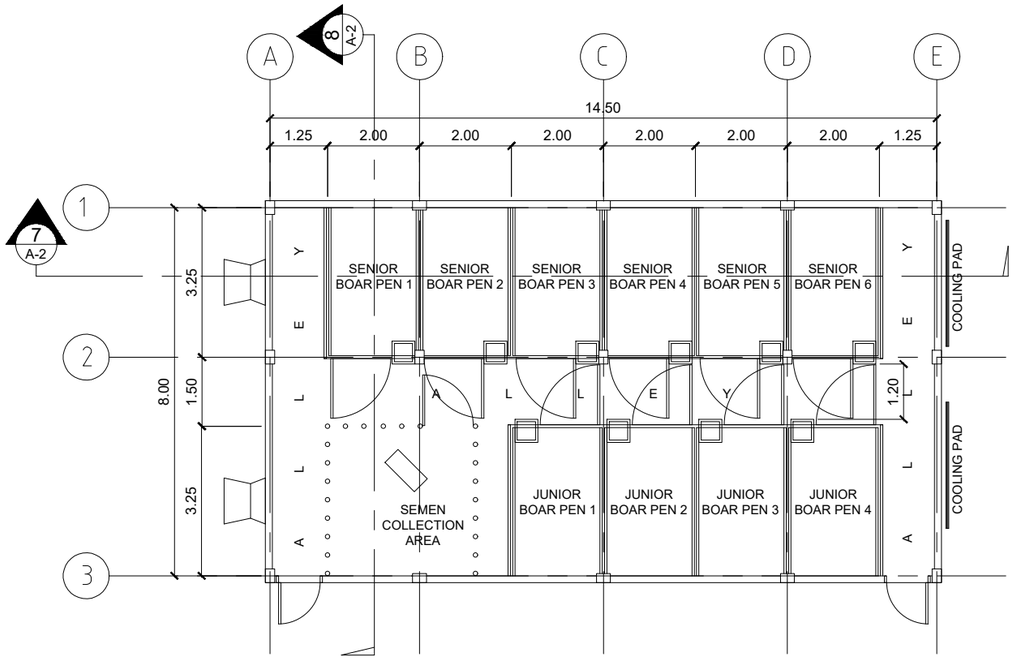

1 A-2 GROUND FLOOR PLAN
SCALE 1:75 M.

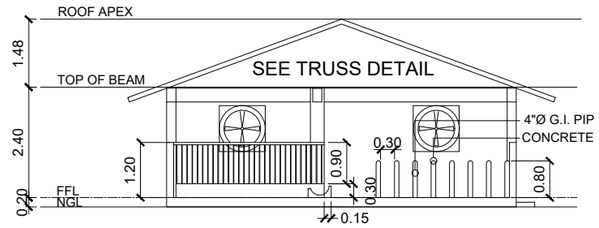

6 A-2 CROSS SECTION
SCALE 1:75 M.

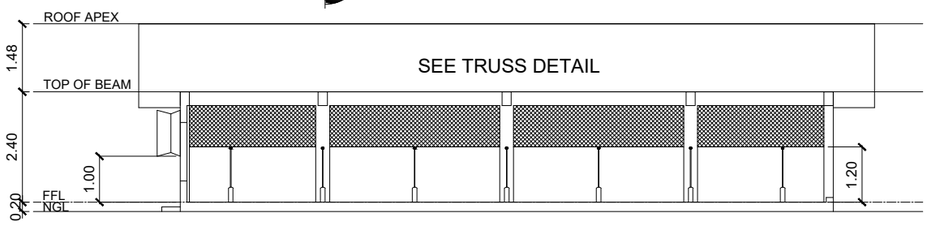

7 A-2 LONGITUDINAL SECTION
SCALE 1:75 M.

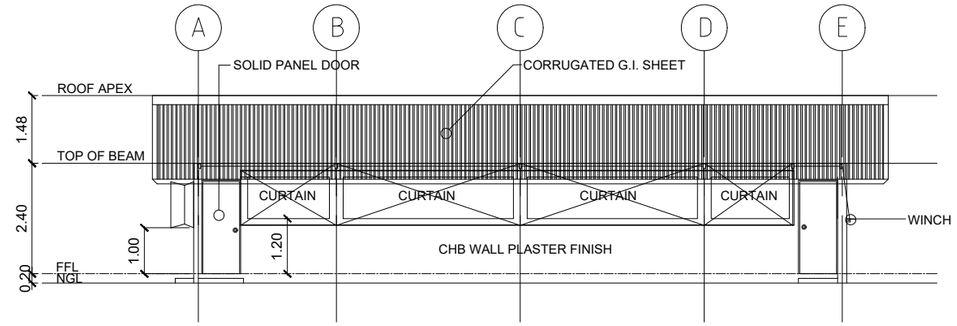

2 A-2 FRONT ELEVATION
SCALE 1:75 M.

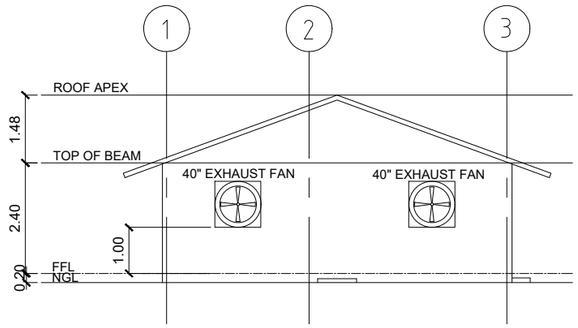

3 A-1 LEFT ELEVATION
SCALE 1:75 M.

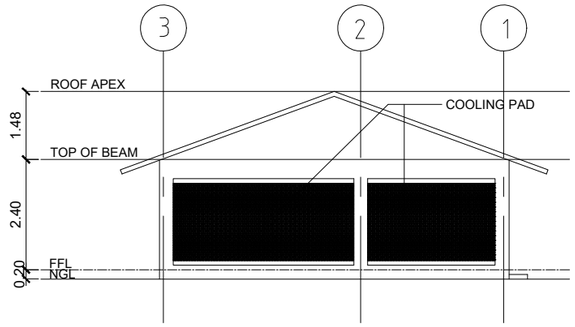

4 A-2 RIGHT ELEVATION
SCALE 1:75 M.

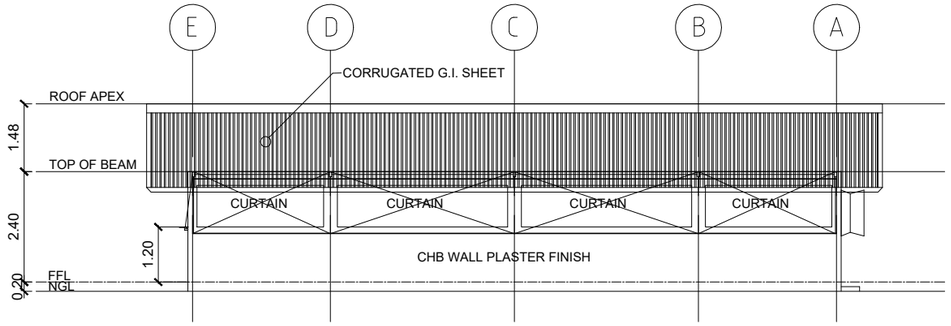

5 A-2 REAR ELEVATION
SCALE 1:75 M.

THESE DRAWINGS ARE THE SOLE PROPERTY OF THE ARCHITECT. NO COPIES, SIMILAR REPRODUCTIONS, ALTERATIONS AND/OR REVISIONS OF ANY KIND ARE TO BE DONE, IN PART OR IN WHOLE TO ANY OF THESE DOCUMENTS, W/O CONSENT FROM THE ARCHITECT.

ENGINEEER	PRC. NO.	PROJECT TITLE	OWNER	APPROVED BY	APPROVED BY	NO.	REVISIONS	DATE	SHEET CONTENT	PROJECT NO.
		Swine AI Sa Barangay (SWAIB) Project			DR. JAYVEE BRYAN G. CARILLO CENTER DIRECTOR ATI - RTC 1				AS SHOWN	SHEET NO. A 2
PTR. NO.	DATE	LOCATION :	ADDRESS :							
TIN	PLACE									

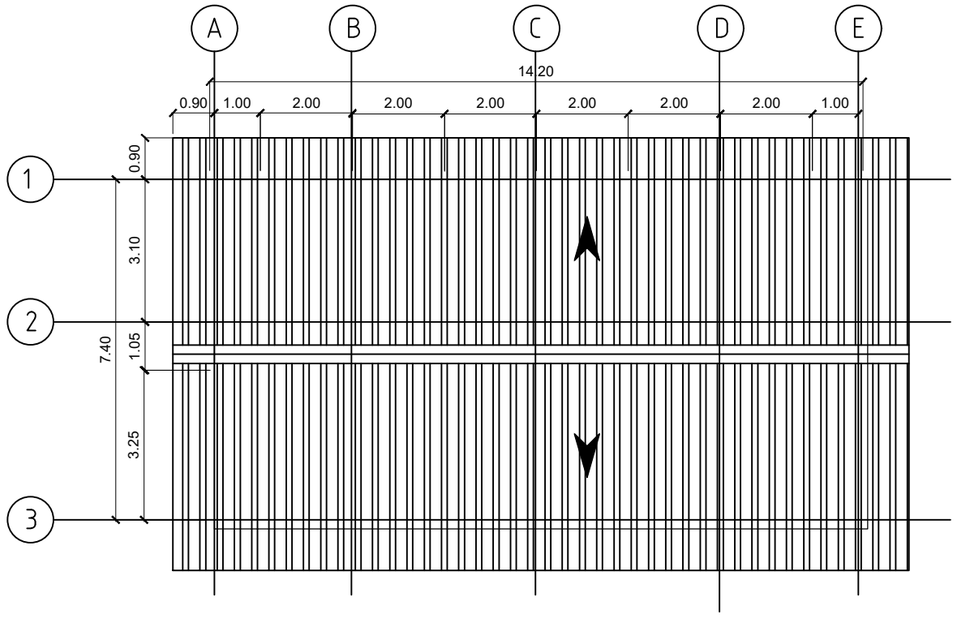

1 A-3 ROOF LAYING PLAN
SCALE 1:75 M.

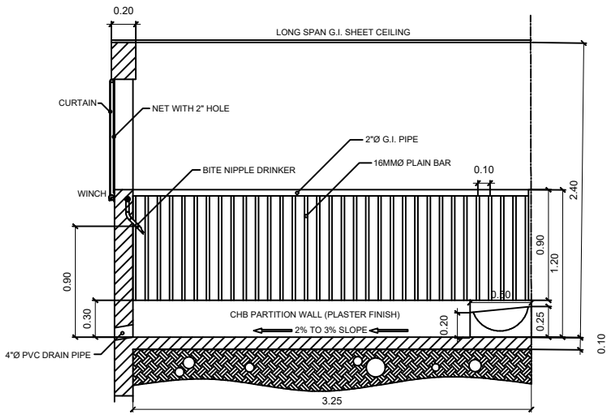

2 A-3 CROSS SECTION DETAIL
SCALE 1:50 M.

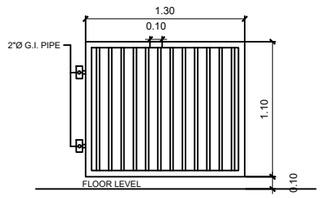

3 A-3 GATE DETAIL
SCALE 1:50 M.

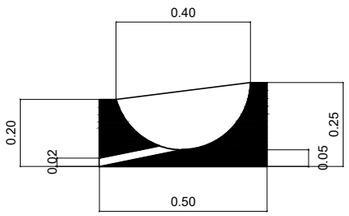

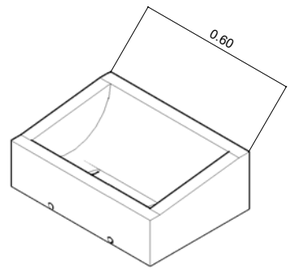

4 A-3 TROUGH DETAIL
SCALE NTS

THESE DRAWINGS ARE THE SOLE PROPERTY OF THE ARCHITECT. NO COPIES, SIMILAR REPRODUCTIONS, ALTERATIONS AND/OR REVISIONS OF ANY KIND ARE TO BE DONE, IN PART OR IN WHOLE TO ANY OF THESE DOCUMENTS, W/O CONSENT FROM THE ARCHITECT.

ENGINEEER	PRC. NO.	PROJECT TITLE	OWNER	APPROVED BY	APPROVED BY	NO.	REVISIONS	DATE	SHEET CONTENT	PROJECT NO.
		Swine AI Sa Barangay (SWAIB) Project			DR. JAYVEE BRYAN G. CARILLO CENTER DIRECTOR ATI - RTC 1				AS SHOWN	SHEET NO. A 3
PTR. NO.	DATE	LOCATION :	ADDRESS :							
TIN	PLACE									

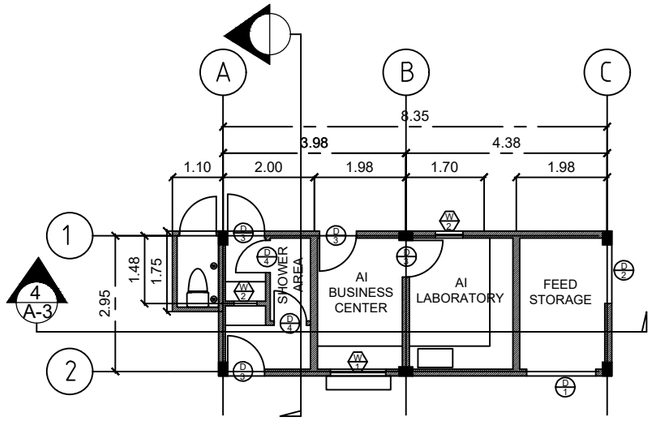

1 A-4 BIO-SECURITY FLOOR PLAN
SCALE 1:75 M.

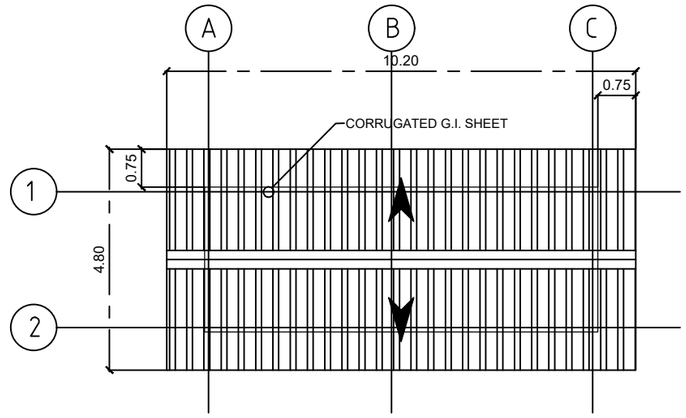

2 A-4 BIO-SECURITY ROOF PLAN
SCALE 1:75 M.

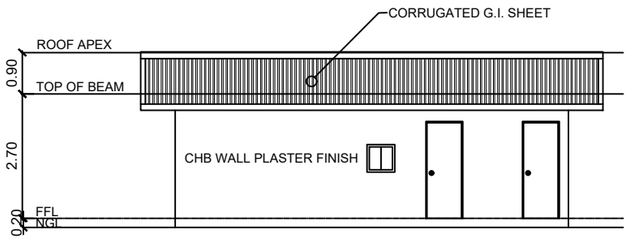

3 A-4 REAR ELEVATION
SCALE 1:75 M.

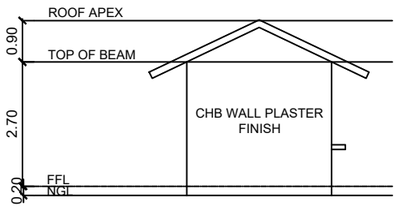

3 A-5 LEFT ELEVATION
SCALE 1:75 M.

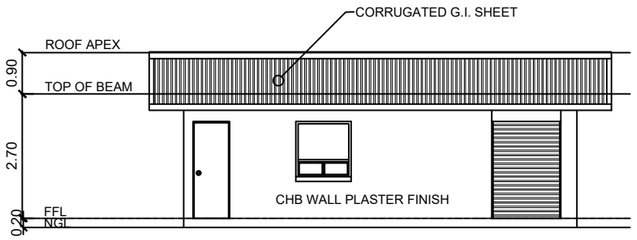

5 A-4 FRONT ELEVATION
SCALE 1:75 M.

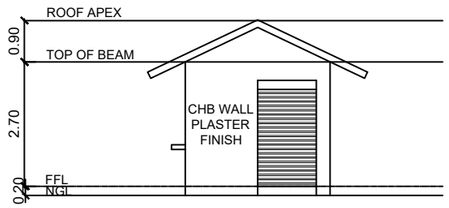

6 A-4 RIGHT ELEVATION
SCALE 1:75 M.

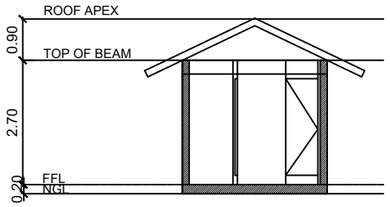

7 A-4 CROSS SECTION
SCALE 1:75 M.

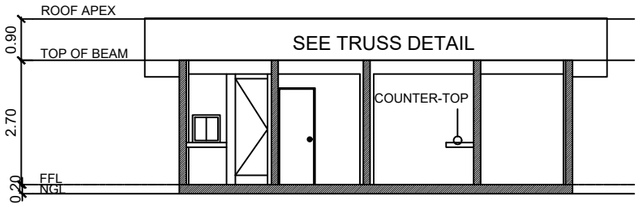

8 A-4 LONGITUDINAL SECTION
SCALE 1:75 M.

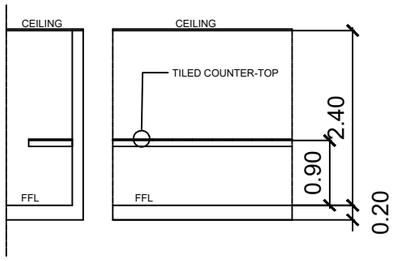

COUNTER-TOP DETAIL

THESE DRAWINGS ARE THE SOLE PROPERTY OF THE ARCHITECT. NO COPIES, SIMILAR REPRODUCTIONS, ALTERATIONS AND/OR REVISIONS OF ANY KIND ARE TO BE DONE, IN PART OR IN WHOLE TO ANY OF THESE DOCUMENTS, W/O CONSENT FROM THE ARCHITECT.	ENGINEER	PRC. NO.	PROJECT TITLE	OWNER	APPROVED BY	APPROVED BY	NO.	REVISIONS	DATE	SHEET CONTENT	PROJECT NO.
			Swine AI Sa Barangay (SWAIB) Project			DR. JAYVEE BRYAN G. CARILLO CENTER DIRECTOR ATI - RTC 1				AS SHOWN	SHEET NO. A 4
	PTR. NO.	DATE	LOCATION :	ADDRESS :							
	TIN	PLACE									

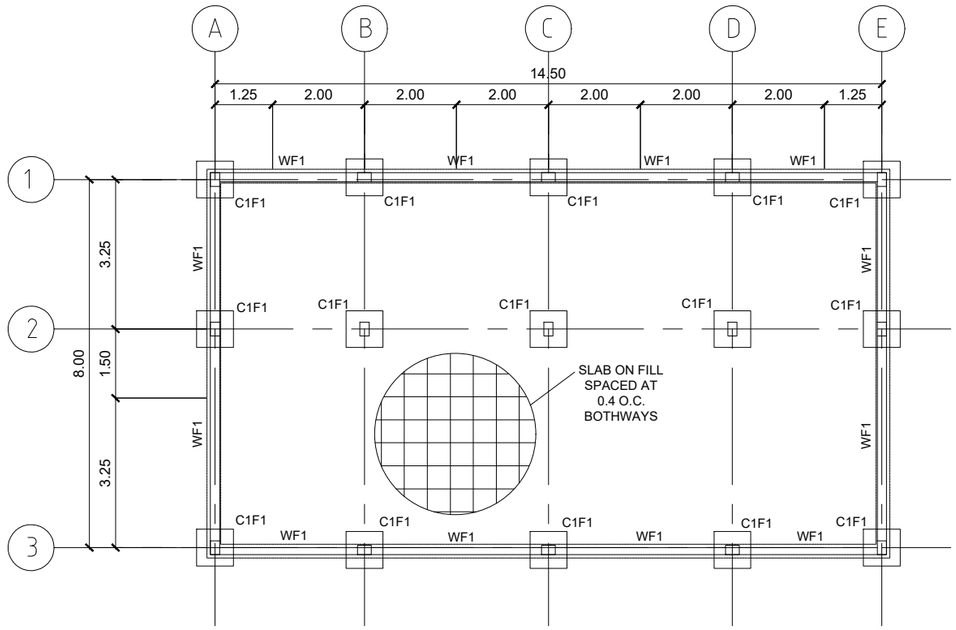

1 S-1 FOUNDATION PLAN
SCALE 1:75 M.

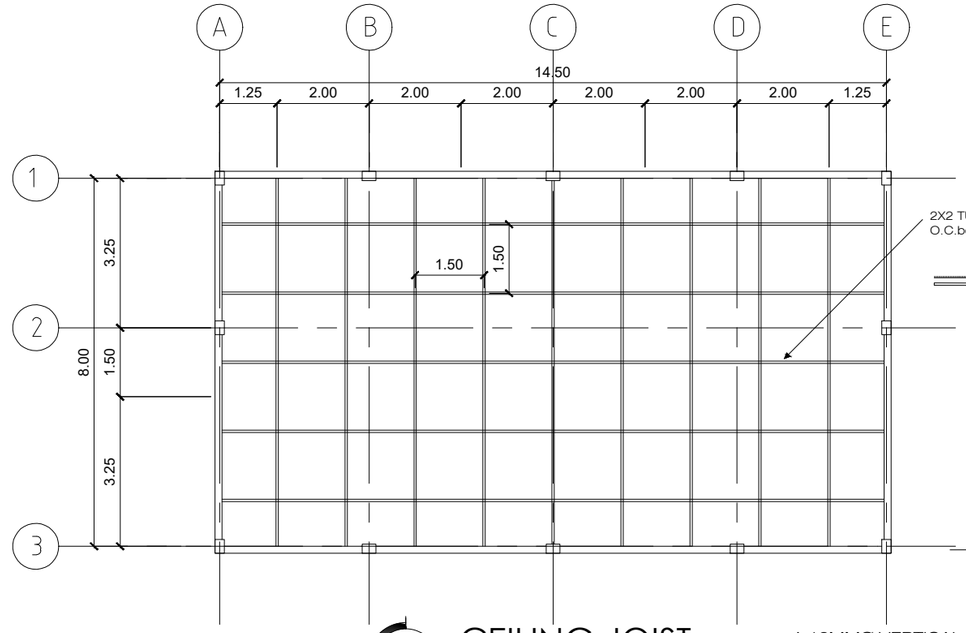

3 S-1 CEILING JOIST
SCALE 1:75 M.

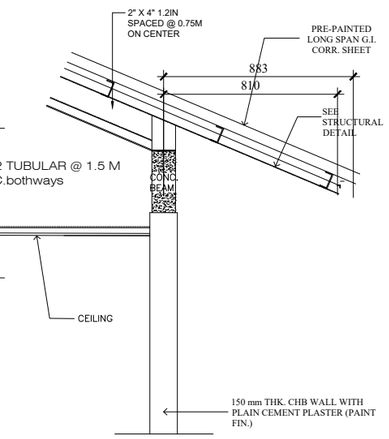

4 S-1 BAY SECTION
SCALE NTS.

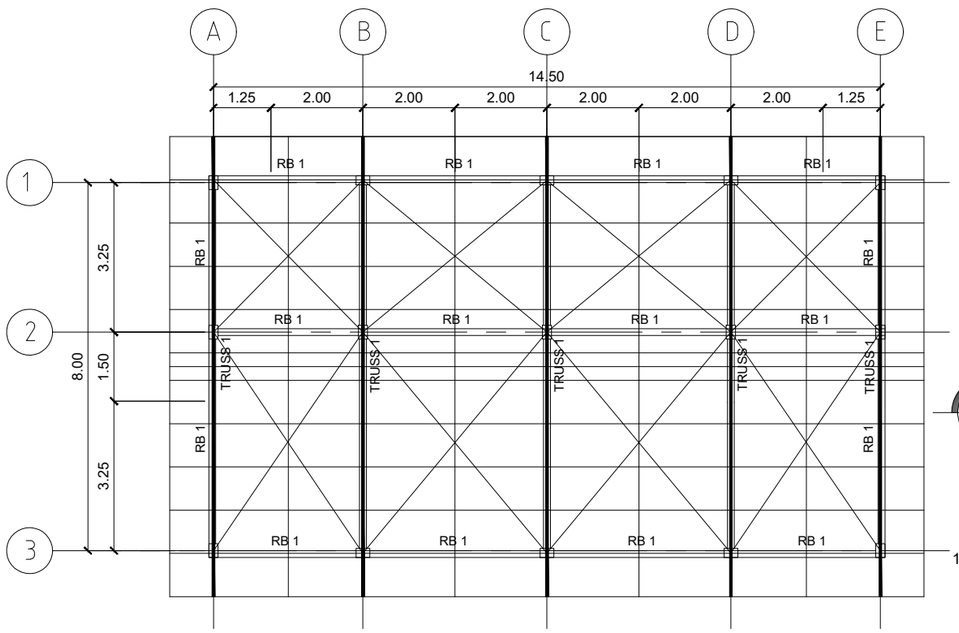

2 S-1 ROOF FRAMING PLAN
SCALE 1:75 M.

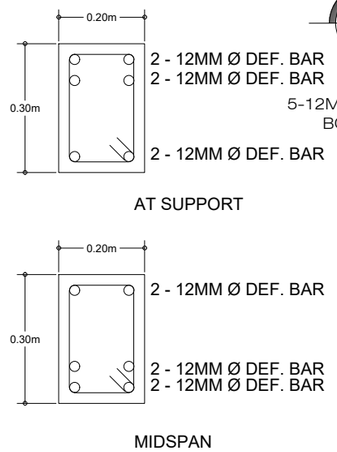

5 S-1 ROOF BEAM DETAILS
SCALE 1.10 M.

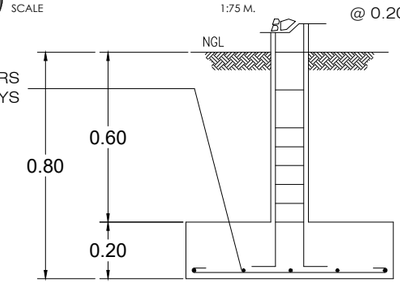

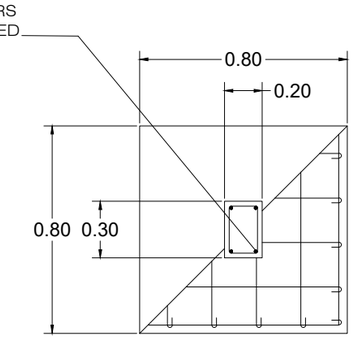

C1F1

6 S-1 COLUMN AND FOOTING DETAIL
SCALE 1:75 M.

TOP BAR - 2 1/2" X 2 1/2" X 1/2" ANGULAR BAR
BOTTOM BAR - 2 1/2" X 2 1/2" X 1/2" ANGULAR BAR
MEMBERS - 2" X 2" X ¼" ANGULAR BAR
PURLINS - 2" X 3" X 1.2MM GI PURLIN

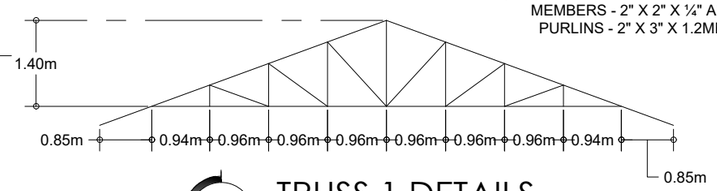

7 S-1 TRUSS 1 DETAILS
SCALE 1.10 M.

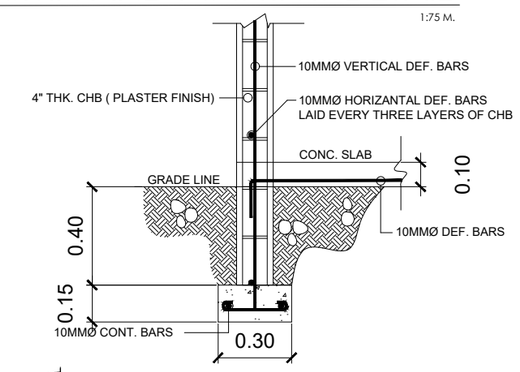

1 A-1 WALL FOOTING DETAIL
SCALE 1:40 M.

THESE DRAWINGS ARE THE SOLE PROPERTY OF THE ARCHITECT. NO COPIES, SIMILAR REPRODUCTIONS, ALTERATIONS AND/OR REVISIONS OF ANY KIND ARE TO BE DONE, IN PART OR IN WHOLE TO ANY OF THESE DOCUMENTS, W/O CONSENT FROM THE ARCHITECT.

ENGINEEER	PRC. NO.	PROJECT TITLE	OWNER	APPROVED BY	APPROVED BY
		Swine AI Sa Barangay (SWAIB) Project			DR. JAYVEE BRYAN G. CARILLO CENTER DIRECTOR ATI - RTC 1
PTR. NO.	DATE	LOCATION :	ADDRESS :		
TIN	PLACE				

NO.	REVISIONS	DATE

SHEET CONTENT	PROJECT NO.
AS SHOWN	SHEET NO. S 1

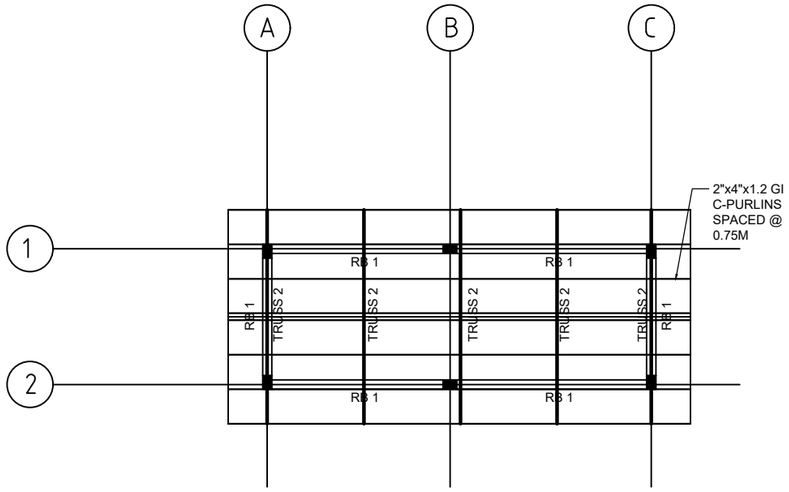

2 S-2 ROOF FRAMING PLAN

SCALE 1:75 M.

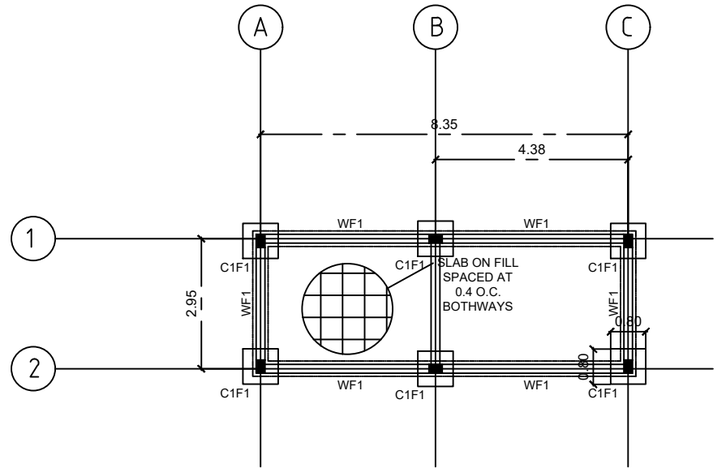

1 S-2 FOUNDATION PLAN

SCALE 1:75 M.

SCHEDULE OF FOOTING					SCHEDULE OF COLUMN				
MARK	SIZE A	X	SIZE B	THICKNESS	REBARS	MARK	SIZE L	X	SIZE W	REBARS	TIES
F-1	0.80	X	0.80	0.30	5 - 12 mm Ø BOTHWAYS	C-1	0.20		0.30	4- 12 mm Ø	10 mm. Ø @ 0.20 m.
WF	0.40	X	CONT.	0.10	3 - 10 mm Ø BOTHWAYS						

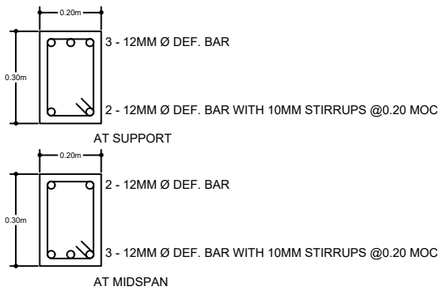

3 S-2 ROOF BEAM DETAILS

SCALE 1.10 M.

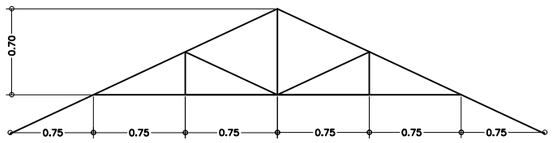

4 S-2 TRUSS 2 DETAILS

SCALE 1.10 M.

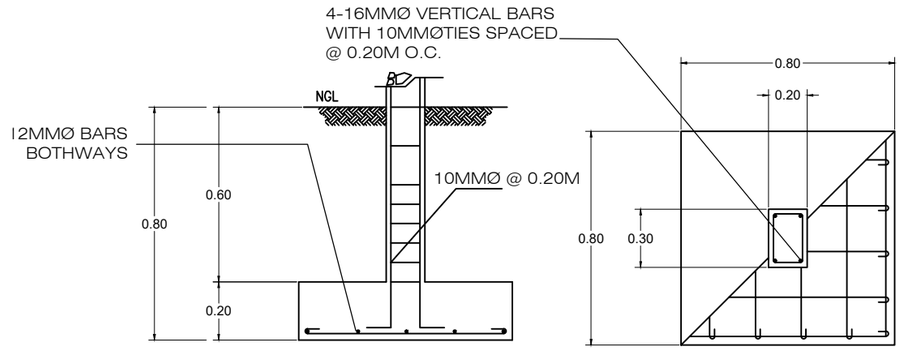

5 S-2 COLUMN AND FOOTING DETAIL

SCALE 1:75 M.

THESE DRAWINGS ARE THE SOLE PROPERTY OF THE ARCHITECT. NO COPIES, SIMILAR REPRODUCTIONS, ALTERATIONS AND/OR REVISIONS OF ANY KIND ARE TO BE DONE, IN PART OR IN WHOLE TO ANY OF THESE DOCUMENTS, W/O CONSENT FROM THE ARCHITECT.

ENGINEEER	PRC. NO.	PROJECT TITLE	OWNER	APPROVED BY	APPROVED BY	NO.	REVISIONS	DATE	SHEET CONTENT	PROJECT NO.
		Swine AI Sa Barangay (SWAIB) Project			DR. JAYVEE BRYAN G. CARILLO CENTER DIRECTOR ATI - RTC 1				AS SHOWN	SHEET NO. S 2
PTR. NO.	DATE									
TIN	PLACE	LOCATION :	ADDRESS :							

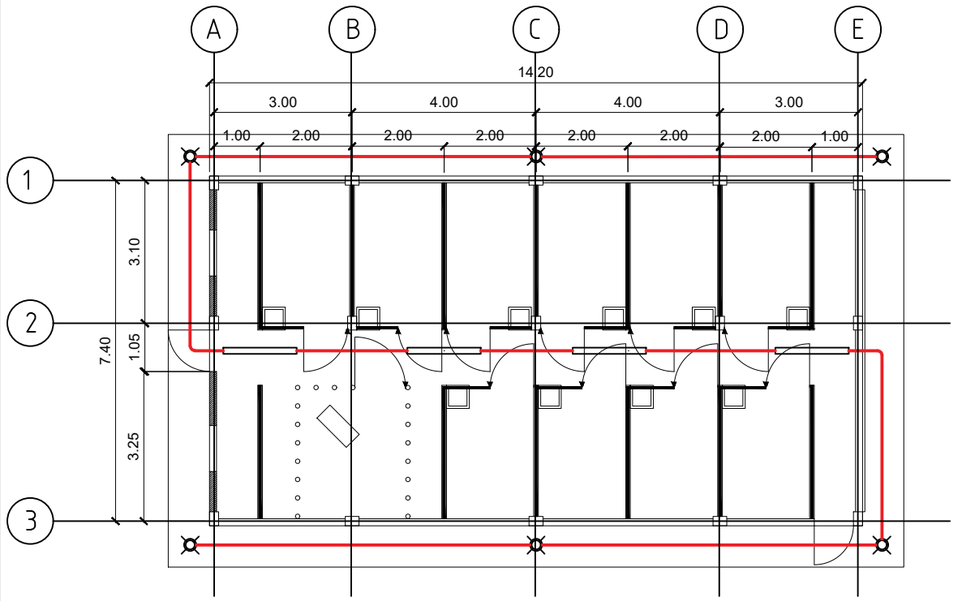

1 E-1 LIGHTING LAYOUT PLAN

SCALE 1:75 M.

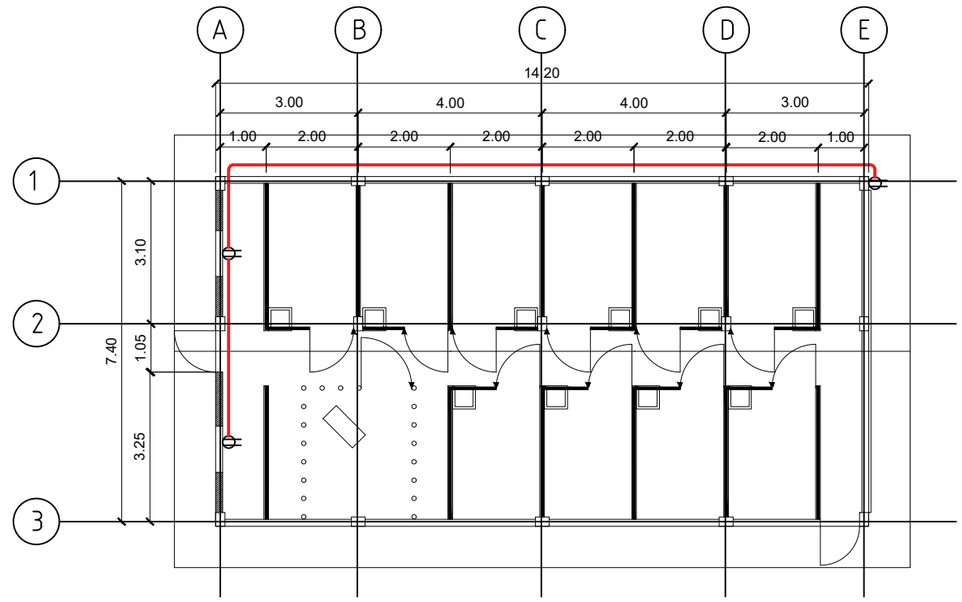

2 E-1 POWER LAYOUT PLAN

SCALE 1:75 M.

GENERAL ELECTRICAL NOTES AND SPECIFICATIONS

1. ALL ELECTRICAL WORKS HEREIN SHALL BE DONE IN ACCORDANCE WITH APPLICABLE PROVISIONS OF THE LATEST EDITION OF THE PHILIPPINE ELECTRICAL CODE, REQUIREMENTS OF THE LOCAL AUTHORITIES ENFORCING THE CODE, AND THE REQUIREMENTS OF THE POWER SERVICE COMPANY CONCERNED.
2. ALL WIRES SHAL BE COPPER TYPE T.W. INTERMIDIATE PVC CONDUIT (IMC) OR UNLESS OTHERWISE SPECIFIED.
3. ALL JUNCTION UTILITY, SQUARE AND PULL BOXES SHALL BE GAUGE # 18 OR APPROVED EQUIVALENT AND SHALL BE PAINTED WITH ONE COAT PRIMER PRIOR TO INSTALLATION.
4. ALL MATERIALS TO BE USED SHALL BE BRAND NEW AND OF THE APPROVED TYPE, APPROPRIATE WITH THE LOCATION AND INTENDED USE.
5. POWER SUPPLY SHALLBE 220 VOLTS, SINGLE PHASE, 60 HERTS, TWO WIRE SYSTEM.
6. ALL WORKS HEREIN SHALL BE DONE UNDER THE DIRECT SUPERVISION OF A DULY QUALIFIED AND LICENSED ELECTRICAL ENGINEER OR MASTER ELECTRICIAN.
7. MINIMUM SIZE OF CONDUCTORS SHALL BE 2.0 mm T.W. IN 15 mm TRADE SIZE.
8. ALL WALL OUTLETS SHALL BE INSTALLED AT THE FOLLOWING HEIGHT ABOVE FINISHED FLOOR LEVEL UNLESS OTHERWISE NOTED.

A. WALL SWITCHES	1.50 mts.
B. CONVENIENCE OUTLET	0.30 mts.
C. PANEL BOARD	1.80 mts.
D. ELECTRIC METER	1.50 mts
E. SERVICE ENTRANCE	5.40 mts.

9. ALL VERTICAL AND HORIZONTAL CONDUIT SHALL BE CONCEALED OR EMBEDDED ON CONCRETE WALLS AND FLOORS.
10. ALL CONDUITS SHALL BE PROPERLY REAMED PRIOR TO INSTALLATION TO DAMGES TO THE SKIN OF THE WIRE.
11. WORKMANSHIP OF THE WORK THROUGHOUT SHALL BE EXECUTED IN THE BEST AND MOST THOROUGH MANNER KNOWN TO THE TRADE AND TO THE SATISFACTION OF THE ARCHITECT AND THE ENGINEER.

SCHEDULE OF LOADS

CKT. NO.	LOAD DESCRIPTION	VOLTS	WATTS	AMPERES	SIZE OF WIRES AND CONDUITS	PROTECTION PER CIRCUIT AT	PROTECTION PER CIRCUIT P
1	AUGER DRIVE	230	1100	4.78	2 - 3.5 mm^2 THW + 1 2.0 mm THW GROUND WIRE IN 20 mm Ø PVC	20 AT	2
2	SWITCH BOX (FANS & PUMPS)	230	4300	18.70	2 - 5.5 mm^2 THW + 1 2.0 mm THW GROUND WIRE IN 20 mm Ø PVC	40 AT	2
3	SPARE	230	1800	7.83	2 - 3.5 mm^2 THW + 1 2.0 mm THW GROUND WIRE IN 20 mm Ø PVC	20 AT	2
4	LIGHTING OUTLET	230	1000	4.35	2 - 2.0 mm^2 THW + 1 2.0 mm THW GROUND WIRE IN 20 mm Ø PVC	15 AT	2
5	LIGHTING OUTLET	230	1000	4.35	2 - 2.0 mm^2 THW + 1 2.0 mm THW GROUND WIRE IN 20 mm Ø PVC	15 AT	2
6	CONVINIENCE OUTLET	230	900	3.91	2 - 3.5 mm^2 THW + 1 2.0 mm THW GROUND WIRE IN 20 mm Ø PVC	20 AT	2
7	AIR CONDITIONING	230	1800	7.83	2 - 3.5 mm^2 THW + 1 2.0 mm THW GROUND WIRE IN 20 mm Ø PVC	20 AT	2
	TOTAL			51.75			

TOTAL CURRENT

I = 51.75 A

MAIN FEEDER CONDUCTOR

I = 51.75 X 1.20
= 62.1 A

USE

2-22 MM^2 THWN STRANDED CU. WIRE
1-8.0 MM^2 THWN GND @ 32Ø PVC CONDUIT

MAIN CIRCUIT PROTECTION

I = 51.75 X 1.25
= 64.69 A

USE

80 AT, 100 AF, 1P
250V 60HZ MCCB

TOTAL KVA

$S = \frac{51.75 \times 2.30}{1000}$

S = 0.12 KVA

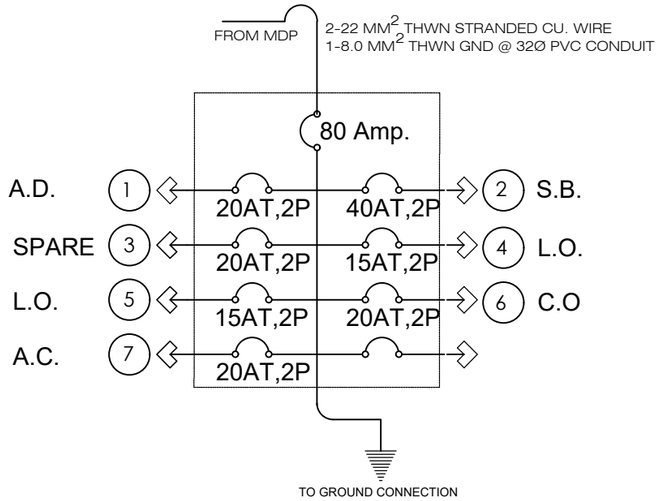

3 E-1 TYPICAL PANEL BOX DETAILS

SCALE NTS.

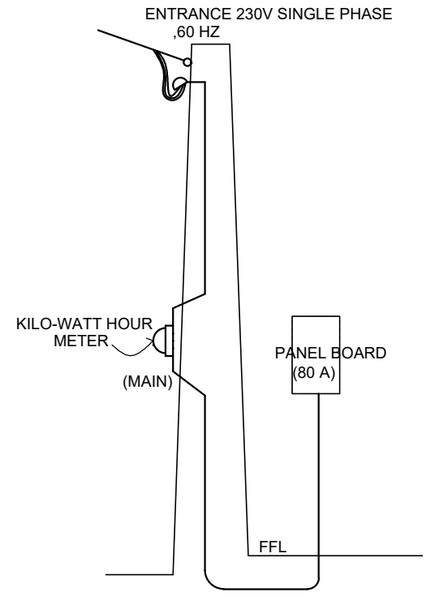

4 E-1 SERVICE ENTRANCE MOUNTING DETAILS

SCALE NTS

THESE DRAWINGS ARE THE SOLE PROPERTY OF THE ARCHITECT. NO COPIES, SIMILAR REPRODUCTIONS, ALTERATIONS AND/OR REVISIONS OF ANY KIND ARE TO BE DONE, IN PART OR IN WHOLE TO ANY OF THESE DOCUMENTS, W/O CONSENT FROM THE ARCHITECT.

ENGINEEER	PRC. NO.
PTR. NO.	DATE
TIN	PLACE

PROJECT TITLE: Swine AI Sa Barangay (SWAIB) Project

LOCATION :

OWNER

ADDRESS :

APPROVED BY

APPROVED BY: DR. JAYVEE BRYAN G. CARILLO, CENTER DIRECTOR, ATI - RTC 1

NO.	REVISIONS	DATE

SHEET CONTENT: AS SHOWN

PROJECT NO.

SHEET NO. E 1

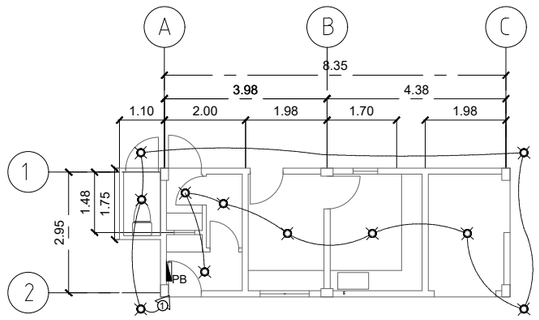

1 E-2 LIGHTING LAYOUT PLAN

SCALE NTS

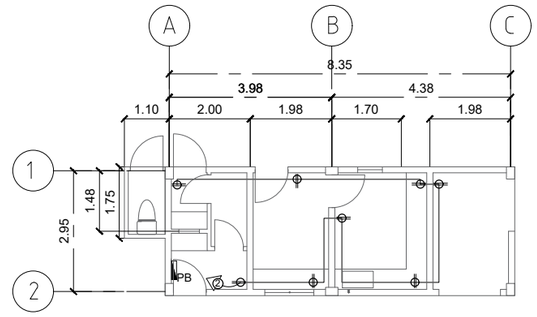

2 E-2 POWER LAYOUT PLAN

SCALE NTS

GENERAL ELECTRICAL NOTES AND SPECIFICATIONS

1. ALL ELECTRICAL WORKS HEREIN SHALL BE DONE IN ACCORDANCE WITH APPLICABLE PROVISIONS OF THE LATEST EDITION OF THE PHILIPPINE ELECTRICAL CODE, REQUIREMENTS OF THE LOCAL AUTHORITIES ENFORCING THE CODE, AND THE REQUIREMENTS OF THE POWER SERVICE COMPANY CONCERNED.
2. ALL WIRES SHAL BE COPPER TYPE T.W. INTERMIDIATE PVC CONDUIT (IMC) OR UNLESS OTHERWISE SPECIFIED.
3. ALL JUNCTION UTILITY, SQUARE AND PULL BOXES SHALL BE GAUGE # 18 OR APPROVED EQUIVALENT AND SHALL BE PAINTED WITH ONE COAT PRIMER PRIOR TO INSTALLATION.
4. ALL MATERIALS TO BE USED SHALL BE BRAND NEW AND OF THE APPROVED TYPE, APPROPRIATE WITH THE LOCATION AND INTENDED USE.
5. POWER SUPPLY SHALLBE 220 VOLTS, SINGLE PHASE, 60 HERTS, TWO WIRE SYSTEM.
6. ALL WORKS HEREIN SHALL BE DONE UNDER THE DIRECT SUPERVISION OF A DULY QUALIFIED AND LICENSED ELECTRICAL ENGINEER OR MASTER ELECTRICIAN.
7. MINIMUM SIZE OF CONDUCTORS SHALL BE 2.0 mm T.W. IN 15 mm TRADE SIZE.
8. ALL WALL OUTLETS SHALL BE INSTALLED AT THE FOLLOWING HEIGHT ABOVE FINISHED FLOOR LEVEL UNLESS OTHERWISE NOTED.

A. WALL SWITCHES	1.50 mts.
B. CONVENIENCE OUTLET	0.30 mts.
C. PANEL BOARD	1.80 mts.
D. ELECTRIC METER	1.50 mts
E. SERVICE ENTRANCE	5.40 mts.

9. ALL VERTICAL AND HORIZONTAL CONDUIT SHALL BE CONCEALED OR EMBEDDED ON CONCRETE WALLS AND FLOORS.
10. ALL CONDUITS SHALL BE PROPERLY REAMED PRIOR TO INSTALLATION TO DAMGES TO THE SKIN OF THE WIRE.
11. WORKMANSHIP OF THE WORK THROUGHOUT SHALL BE EXECUTED IN THE BEST AND MOST THOROUGH MANNER KNOWN TO THE TRADE AND TO THE SATISFACTION OF THE ARCHITECT AND THE ENGINEER.

SCHEDULE OF LOADS AND COMPUTATIONS

CKT NO.	L.O.	C.O.	TOTAL LOADS			CIRCUIT BREAKER	SIZE OF WIRE	SIZE OF CONDUIT
			VA	VOLTS	AMPS			
1	11		1100	230	4.78	15 AT 2P	2-2.0mm2 THW WIRE	$\frac{1}{2}$"Ø PVC
2		8	1440	230	6.26	20 AT 2P	2-3.5mm2 THW WIRE	$\frac{1}{2}$"Ø PVC
TOT			2540	230	11.04	30 AT 2P	2-5.5mm2 THW WIRE	$\frac{3}{4}$" Ø PVC

COMPUTED LOAD = 2540/230V = 11.04 AMPS
USE FEEDER CONDUCTOR - 2-5.5MM2 THW WIRE IN $\frac{3}{4}$" PVC CONDUIT
MAIN PROTECTION - CIRCUIT BREAKER 30 AT 2P 230V

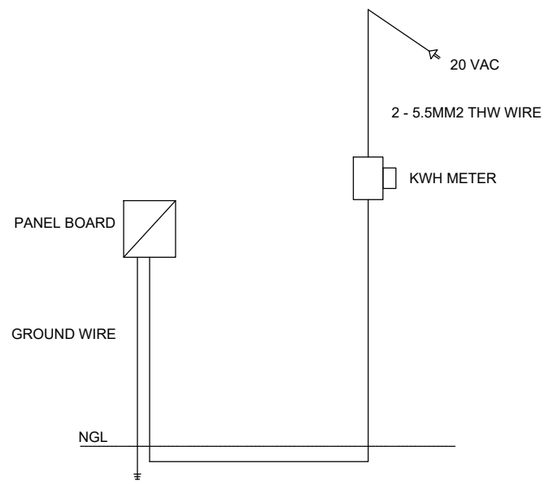

3 E-2 RISER DIAGRAM

SCALE NTS

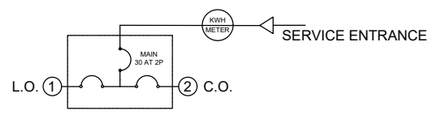

4 E-2 PANEL BOARD DETAILS

SCALE NTS

THESE DRAWINGS ARE THE SOLE PROPERTY OF THE ARCHITECT. NO COPIES, SIMILAR REPRODUCTIONS, ALTERATIONS AND/OR REVISIONS OF ANY KIND ARE TO BE DONE, IN PART OR IN WHOLE TO ANY OF THESE DOCUMENTS, W/O CONSENT FROM THE ARCHITECT.

ENGINEER	PRC. NO.	PROJECT TITLE	OWNER	APPROVED BY	APPROVED BY	NO.	REVISIONS	DATE	SHEET CONTENT	PROJECT NO.
		Swine AI Sa Barangay (SWAIB) Project			DR. JAYVEE BRYAN G. CARILLO CENTER DIRECTOR ATI - RTC 1				AS SHOWN	SHEET NO. E 2
PTR. NO.	DATE	LOCATION :	ADDRESS :							
TIN	PLACE									

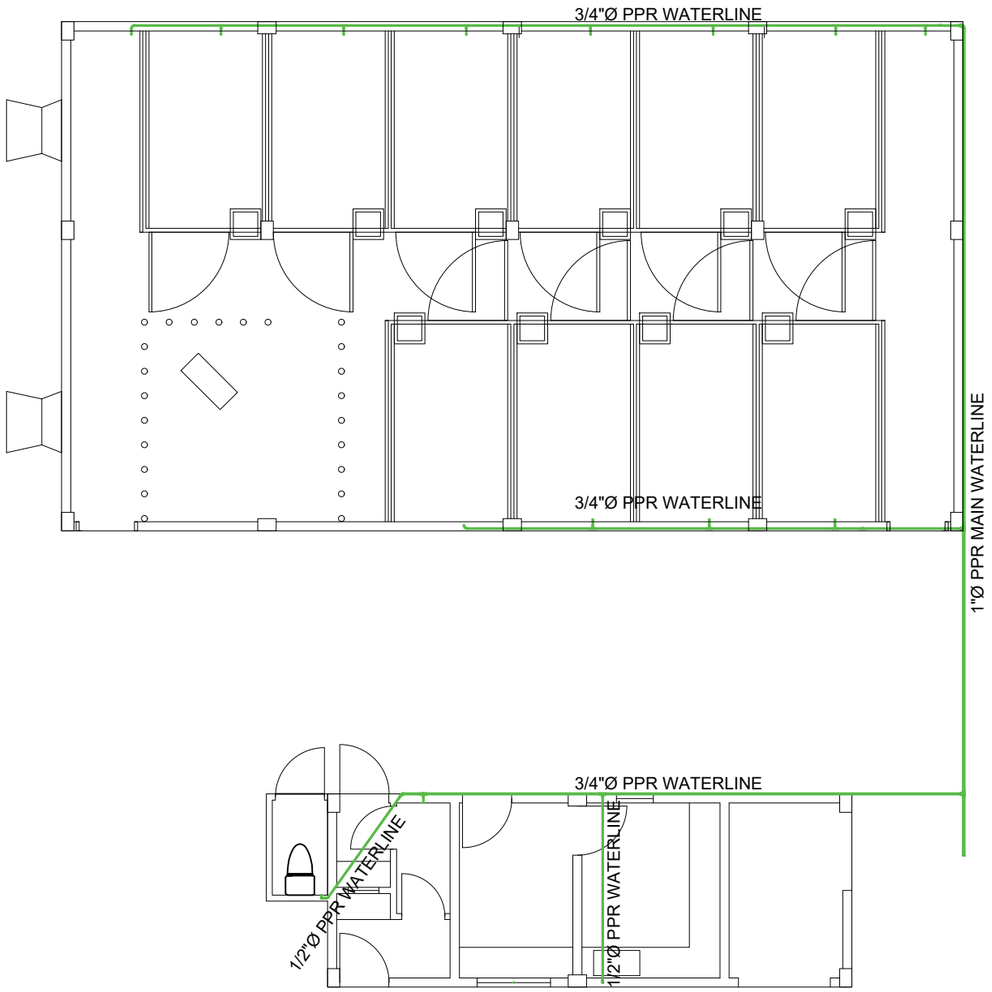

1 P-1 WATERLINE PLUMBING LAYOUT

SCALE 1:75 M.

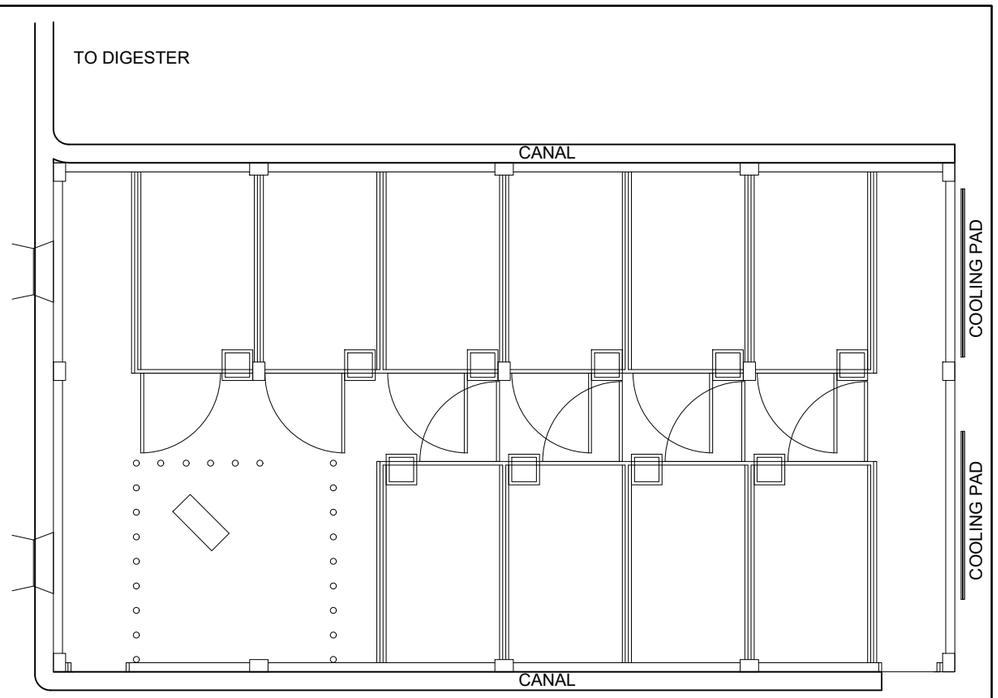

2 P-2 SEWERLINE LAYOUT

SCALE NTS

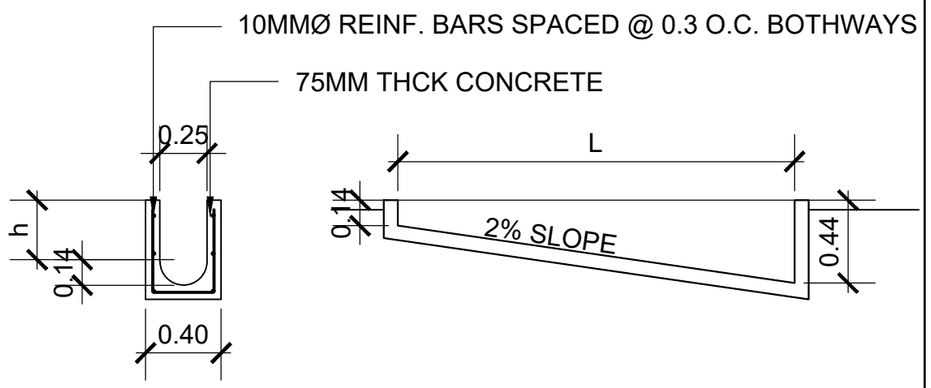

3 P-1 CANAL DETAILS

SCALE NTS

THESE DRAWINGS ARE THE SOLE PROPERTY OF THE ARCHITECT. NO COPIES, SIMILAR REPRODUCTIONS, ALTERATIONS AND/OR REVISIONS OF ANY KIND ARE TO BE DONE, IN PART OR IN WHOLE TO ANY OF THESE DOCUMENTS, W/O CONSENT FROM THE ARCHITECT.

ENGINEEER	PRC. NO.	PROJECT TITLE	OWNER	APPROVED BY	APPROVED BY	NO.	REVISIONS	DATE	SHEET CONTENT	PROJECT NO.
		Swine AI Sa Barangay (SWAIB) Project			DR. JAYVEE BRYAN G. CARILLO CENTER DIRECTOR ATI - RTC 1				AS SHOWN	SHEET NO. P 1
PTR. NO.	DATE	LOCATION :	ADDRESS :							
TIN	PLACE									

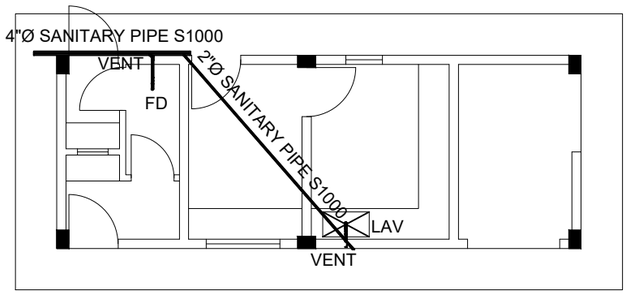

1 P-2 SEWERLINE PLUMBING LAYOUT

SCALE 1:75 M.

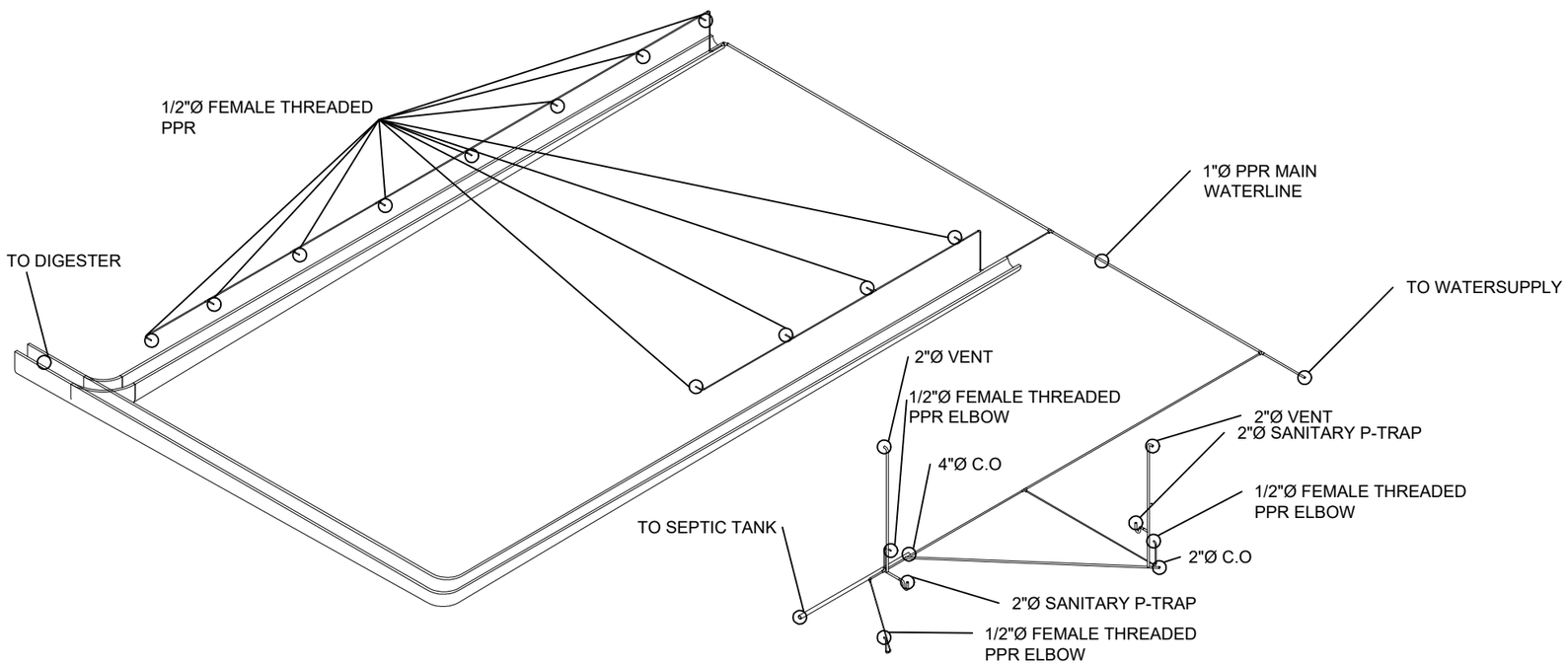

2 P-2 ISOMETRIC PLUMBING LAYOUT

SCALE NTS

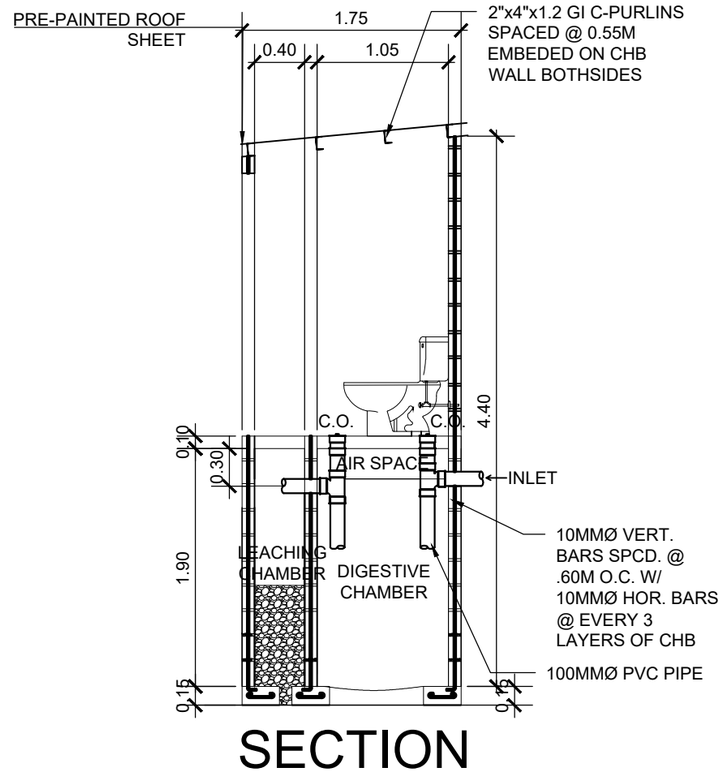

SECTION

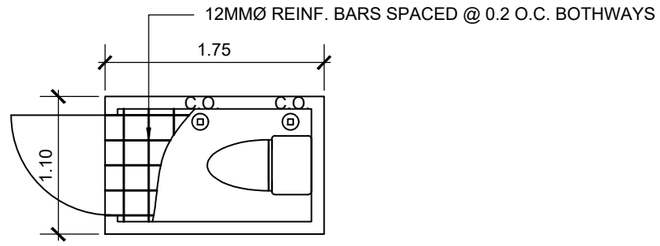

PLAN

3 P-2 SEPTIC TANK DETAILS

SCALE NTS

THESE DRAWINGS ARE THE SOLE PROPERTY OF THE ARCHITECT. NO COPIES, SIMILAR REPRODUCTIONS, ALTERATIONS AND/OR REVISIONS OF ANY KIND ARE TO BE DONE, IN PART OR IN WHOLE TO ANY OF THESE DOCUMENTS, W/O CONSENT FROM THE ARCHITECT.

ENGINEEER	PRC. NO.	PROJECT TITLE	OWNER	APPROVED BY	APPROVED BY	NO.	REVISIONS	DATE	SHEET CONTENT	PROJECT NO.
		Swine AI Sa Barangay (SWAIB) Project			DR. JAYVEE BRYAN G. CARILLO CENTER DIRECTOR ATI - RTC 1				AS SHOWN	SHEET NO. P 2
PTR. NO.	DATE	LOCATION :	ADDRESS :							
TIN	PLACE									

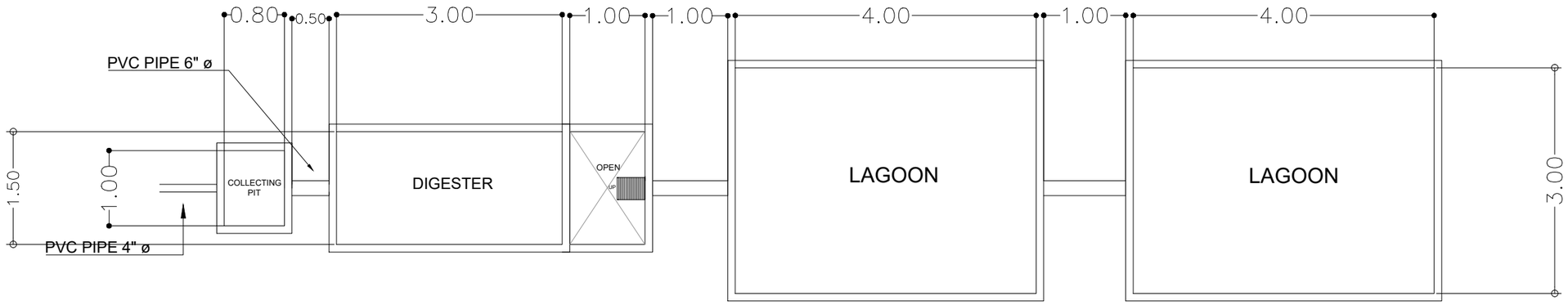

PLAN/LAYOUT

SCALE 1:50 MTS

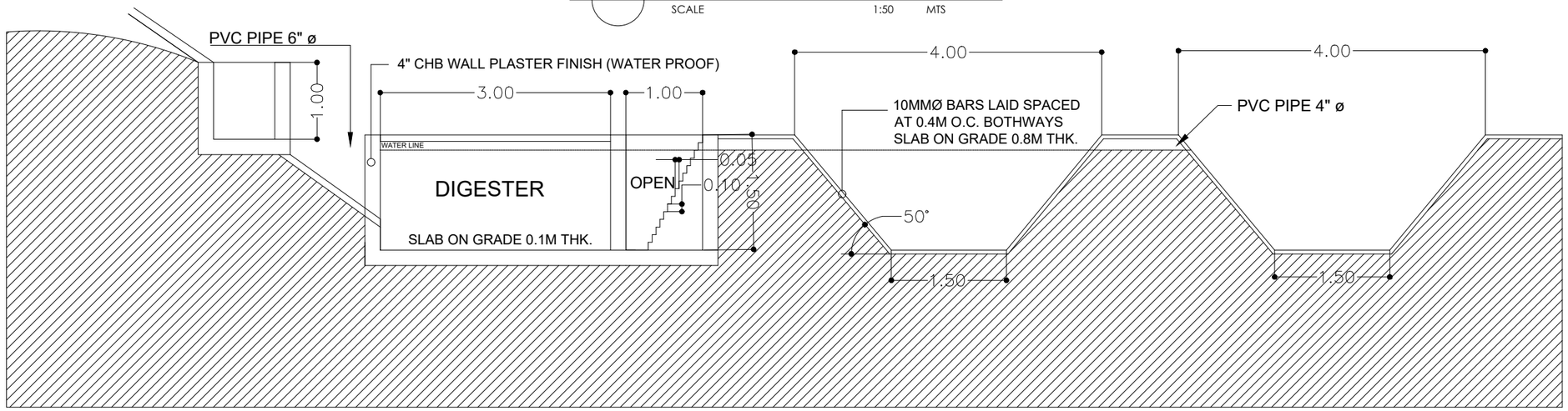

LONGITUDINAL SECTION

SCALE 1:50 MTS

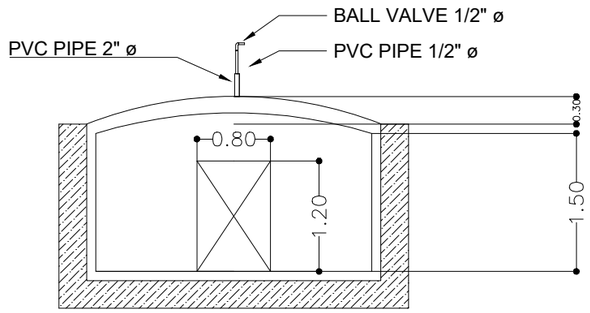

DIGESTER ELEVATION

SCALE 1:50 MTS

NOTE:
CHOOSE ONE BETWEEN TWO TYPES OF WASTE MANAGEMENT FOR YOUR PROJECT

THESE DRAWINGS ARE THE SOLE PROPERTY OF THE ARCHITECT. NO COPIES, SIMILAR REPRODUCTIONS, ALTERATIONS AND/OR REVISIONS OF ANY KIND ARE TO BE DONE, IN PART OR IN WHOLE TO ANY OF THESE DOCUMENTS, W/O CONSENT FROM THE ARCHITECT.

ENGINEEER	PRC. NO.	PROJECT TITLE	OWNER	APPROVED BY	APPROVED BY	NO.	REVISIONS	DATE	SHEET CONTENT	PROJECT NO.
		Swine AI Sa Barangay (SWAIB) Project			DR. JAYVEE BRYAN G. CARILLO CENTER DIRECTOR ATI - RTC 1				AS SHOWN	SHEET NO. P 3
PTR. NO.	DATE	LOCATION :	ADDRESS :							
TIN	PLACE									

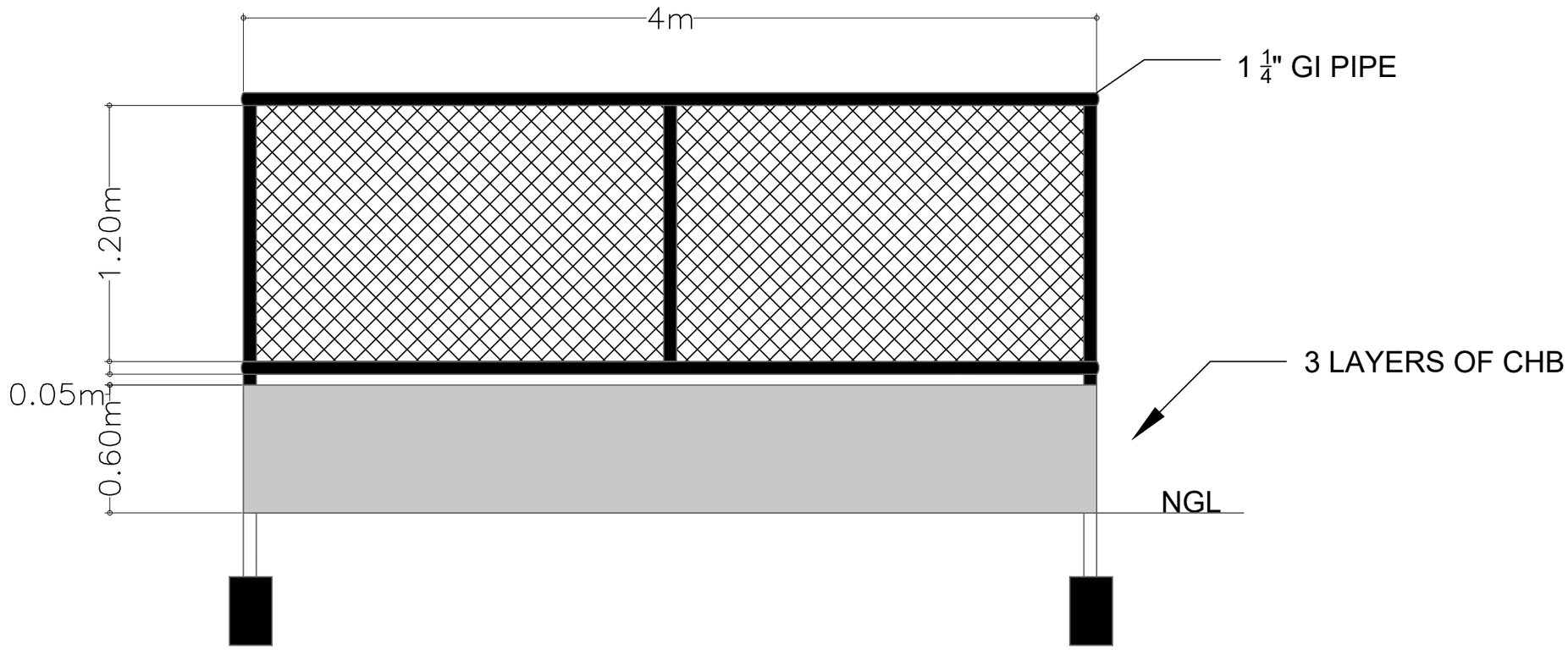

FENCE DETAILS

SCALE NTS

THESE DRAWINGS ARE THE SOLE PROPERTY OF THE ARCHITECT. NO COPIES, SIMILAR REPRODUCTIONS, ALTERATIONS AND/OR REVISIONS OF ANY KIND ARE TO BE DONE, IN PART OR IN WHOLE TO ANY OF THESE DOCUMENTS, W/O CONSENT FROM THE ARCHITECT.

ENGINEEER	PRC. NO.	PROJECT TITLE	OWNER	APPROVED BY	APPROVED BY	NO.	REVISIONS	DATE	SHEET CONTENT	PROJECT NO.
		Swine AI Sa Barangay (SWAIB) Project			DR. JAYVEE BRYAN G. CARILLO CENTER DIRECTOR ATI - RTC 1				AS SHOWN	SHEET NO.
PTR. NO.	DATE	LOCATION :	ADDRESS :							
TIN	PLACE									