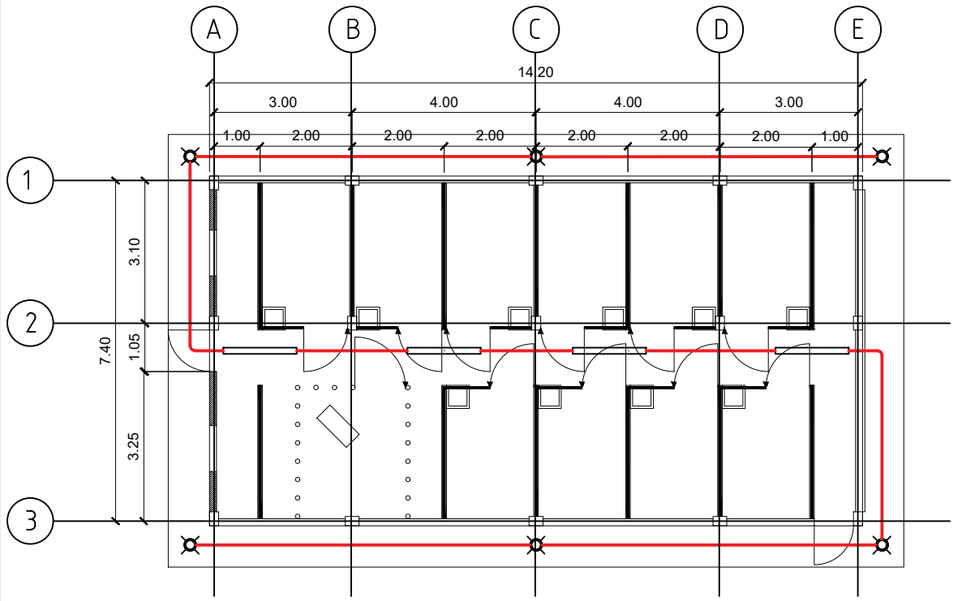

1 E-1 LIGHTING LAYOUT PLAN

SCALE 1:75 M.

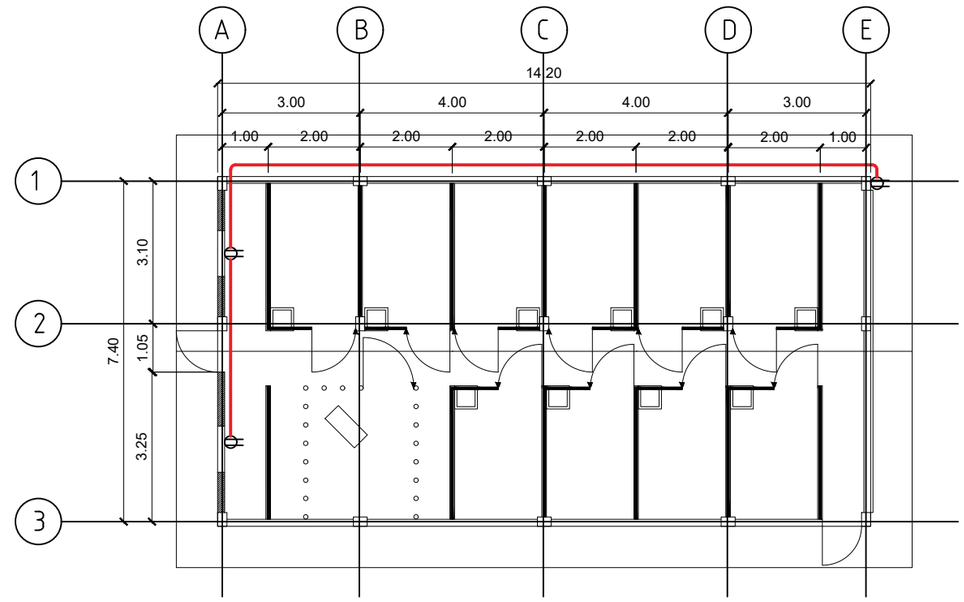

2 E-1 POWER LAYOUT PLAN

SCALE 1:75 M.

GENERAL ELECTRICAL NOTES AND SPECIFICATIONS

1. ALL ELECTRICAL WORKS HEREIN SHALL BE DONE IN ACCORDANCE WITH APPLICABLE PROVISIONS OF THE LATEST EDITION OF THE PHILIPPINE ELECTRICAL CODE, REQUIREMENTS OF THE LOCAL AUTHORITIES ENFORCING THE CODE, AND THE REQUIREMENTS OF THE POWER SERVICE COMPANY CONCERNED.
2. ALL WIRES SHAL BE COPPER TYPE T.W. INTERMIDIATE PVC CONDUIT (IMC) OR UNLESS OTHERWISE SPECIFIED.
3. ALL JUNCTION UTILITY, SQUARE AND PULL BOXES SHALL BE GAUGE # 18 OR APPROVED EQUIVALENT AND SHALL BE PAINTED WITH ONE COAT PRIMER PRIOR TO INSTALLATION.
4. ALL MATERIALS TO BE USED SHALL BE BRAND NEW AND OF THE APPROVED TYPE, APPROPRIATE WITH THE LOCATION AND INTENDED USE.
5. POWER SUPPLY SHALLBE 220 VOLTS, SINGLE PHASE, 60 HERTS, TWO WIRE SYSTEM.
6. ALL WORKS HEREIN SHALL BE DONE UNDER THE DIRECT SUPERVISION OF A DULY QUALIFIED AND LICENSED ELECTRICAL ENGINEER OR MASTER ELECTRICIAN.
7. MINIMUM SIZE OF CONDUCTORS SHALL BE 2.0 mm T.W. IN 15 mm TRADE SIZE.
8. ALL WALL OUTLETS SHALL BE INSTALLED AT THE FOLLOWING HEIGHT ABOVE FINISHED FLOOR LEVEL UNLESS OTHERWISE NOTED.

A. WALL SWITCHES	1.50 mts.
B. CONVENIENCE OUTLET	0.30 mts.
C. PANEL BOARD	1.80 mts.
D. ELECTRIC METER	1.50 mts
E. SERVICE ENTRANCE	5.40 mts.

9. ALL VERTICAL AND HORIZONTAL CONDUIT SHALL BE CONCEALED OR EMBEDDED ON CONCRETE WALLS AND FLOORS.
10. ALL CONDUITS SHALL BE PROPERLY REAMED PRIOR TO INSTALLATION TO DAMGES TO THE SKIN OF THE WIRE.
11. WORKMANSHIP OF THE WORK THROUGHOUT SHALL BE EXECUTED IN THE BEST AND MOST THOROUGH MANNER KNOWN TO THE TRADE AND TO THE SATISFACTION OF THE ARCHITECT AND THE ENGINEER.

SCHEDULE OF LOADS

CKT. NO.	LOAD DESCRIPTION	VOLTS	WATTS	AMPERES	SIZE OF WIRES AND CONDUITS	PROTECTION PER CIRCUIT AT	PROTECTION PER CIRCUIT P
1	AUGER DRIVE	230	1100	4.78	2 - 3.5 mm^2 THW + 1 2.0 mm THW GROUND WIRE IN 20 mm Ø PVC	20 AT	2
2	SWITCH BOX (FANS & PUMPS)	230	4300	18.70	2 - 5.5 mm^2 THW + 1 2.0 mm THW GROUND WIRE IN 20 mm Ø PVC	40 AT	2
3	SPARE	230	1800	7.83	2 - 3.5 mm^2 THW + 1 2.0 mm THW GROUND WIRE IN 20 mm Ø PVC	20 AT	2
4	LIGHTING OUTLET	230	1000	4.35	2 - 2.0 mm^2 THW + 1 2.0 mm THW GROUND WIRE IN 20 mm Ø PVC	15 AT	2
5	LIGHTING OUTLET	230	1000	4.35	2 - 2.0 mm^2 THW + 1 2.0 mm THW GROUND WIRE IN 20 mm Ø PVC	15 AT	2
6	CONVINIENCE OUTLET	230	900	3.91	2 - 3.5 mm^2 THW + 1 2.0 mm THW GROUND WIRE IN 20 mm Ø PVC	20 AT	2
7	AIR CONDITIONING	230	1800	7.83	2 - 3.5 mm^2 THW + 1 2.0 mm THW GROUND WIRE IN 20 mm Ø PVC	20 AT	2
	TOTAL			51.75			

TOTAL CURRENT
I = 51.75 A

MAIN FEEDER CONDUCTOR
I = 51.75 X 1.20
= 62.1 A
USE
2-22 MM^2 THWN STRANDED CU. WIRE
1-8.0 MM^2 THWN GND @ 32Ø PVC CONDUIT

MAIN CIRCUIT PROTECTION
I = 51.75 X 1.25
= 64.69 A
USE
80 AT, 100 AF, 1P
250V 60HZ MCCB

TOTAL KVA
$S = \frac{51.75 \times 2.30}{1000}$
S = 0.12 KVA

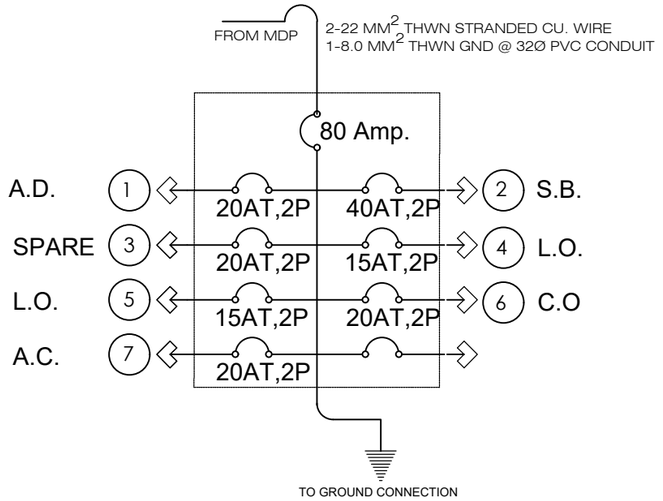

3 E-1 TYPICAL PANEL BOX DETAILS

SCALE NTS.

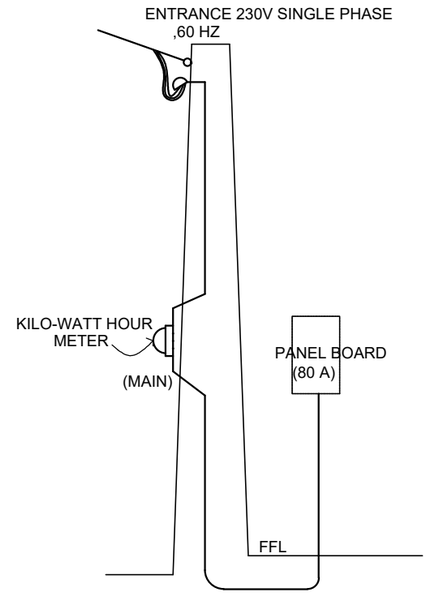

4 E-1 SERVICE ENTRANCE MOUNTING DETAILS

SCALE NTS

THESE DRAWINGS ARE THE SOLE PROPERTY OF THE ARCHITECT. NO COPIES, SIMILAR REPRODUCTIONS, ALTERATIONS AND/OR REVISIONS OF ANY KIND ARE TO BE DONE, IN PART OR IN WHOLE TO ANY OF THESE DOCUMENTS, W/O CONSENT FROM THE ARCHITECT.

ENGINEEER	PRC. NO.	PROJECT TITLE	OWNER	APPROVED BY	APPROVED BY	NO.	REVISIONS	DATE	SHEET CONTENT	PROJECT NO.
		Swine AI Sa Barangay (SWAIB) Project			DR. RUTH MICLAT-SONACO PROGRAM DIRECTOR NATIONAL LIVESTOCK PROGRAM				AS SHOWN	SHEET NO. E 1
PTR. NO.	DATE	LOCATION :	ADDRESS :							
TIN	PLACE									