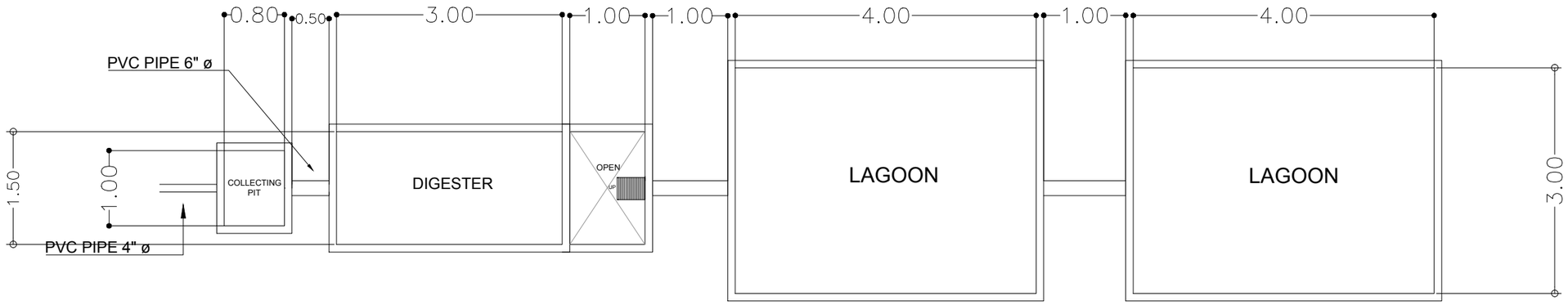

PLAN/LAYOUT

SCALE 1:50 MTS

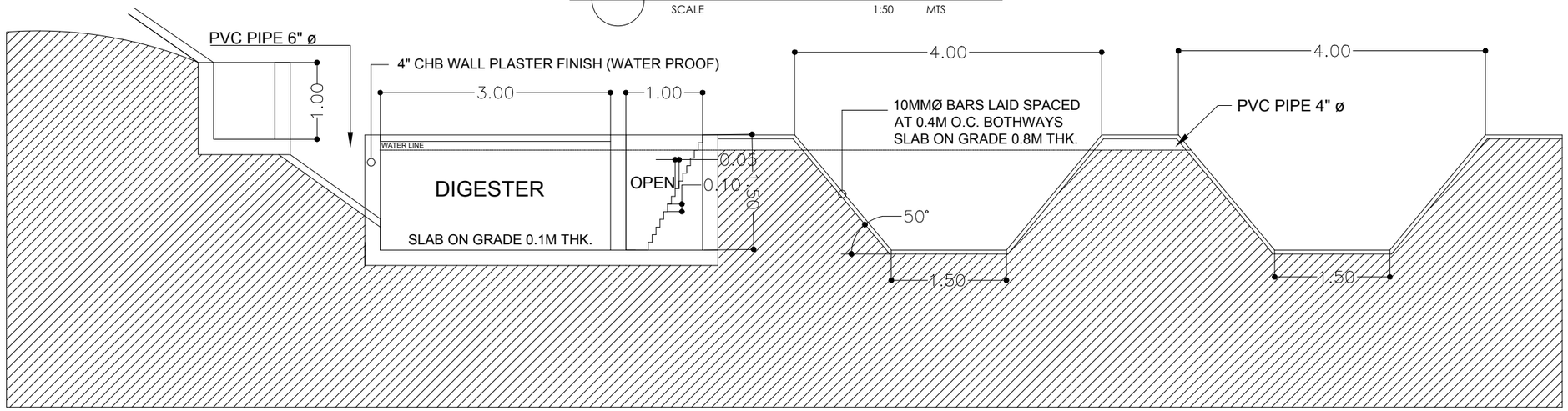

LONGITUDINAL SECTION

SCALE 1:50 MTS

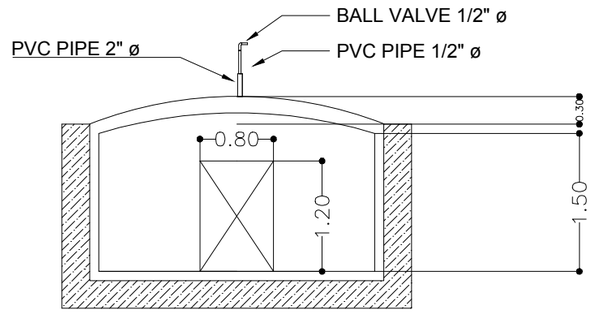

DIGESTER ELEVATION

SCALE 1:50 MTS

NOTE:
CHOOSE ONE BETWEEN TWO TYPES OF WASTE MANAGEMENT FOR YOUR PROJECT

OPTION 1

THESE DRAWINGS ARE THE SOLE PROPERTY OF THE ARCHITECT. NO COPIES, SIMILAR REPRODUCTIONS, ALTERATIONS AND/OR REVISIONS OF ANY KIND ARE TO BE DONE, IN PART OR IN WHOLE TO ANY OF THESE DOCUMENTS, W/O CONSENT FROM THE ARCHITECT.

ENGINEEER	PRC. NO.	PROJECT TITLE	OWNER	APPROVED BY	APPROVED BY	NO.	REVISIONS	DATE	SHEET CONTENT	PROJECT NO.
		Swine AI Sa Barangay (SWAIB) Project			DR. RUTH MICLAT-SONACO				AS SHOWN	SHEET NO. P 3
PTR. NO.	DATE	LOCATION :	ADDRESS :		PROGRAM DIRECTOR NATIONAL LIVESTOCK PROGRAM					
TIN	PLACE									