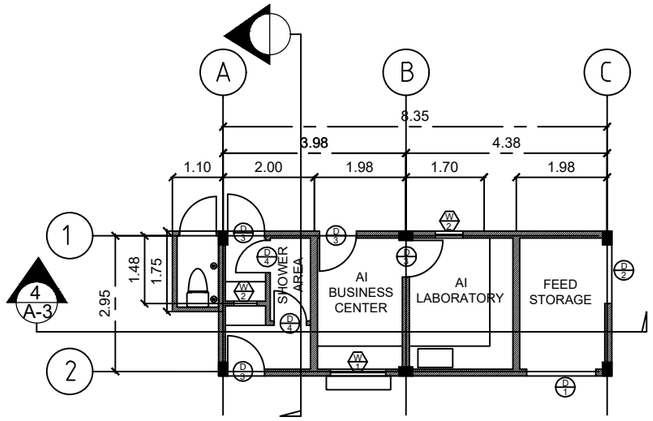

1 A-4 BIO-SECURITY FLOOR PLAN
SCALE 1:75 M.

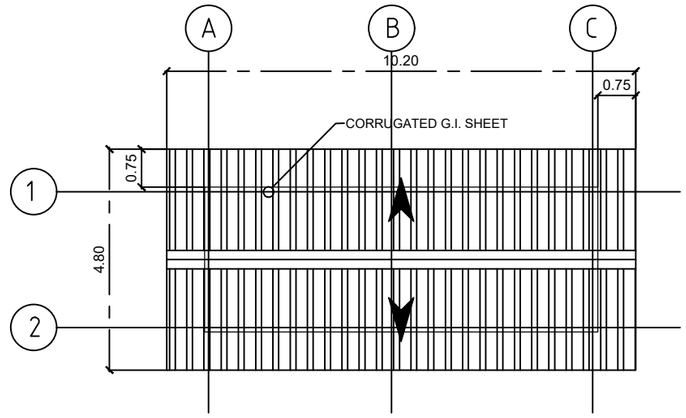

2 A-4 BIO-SECURITY ROOF PLAN
SCALE 1:75 M.

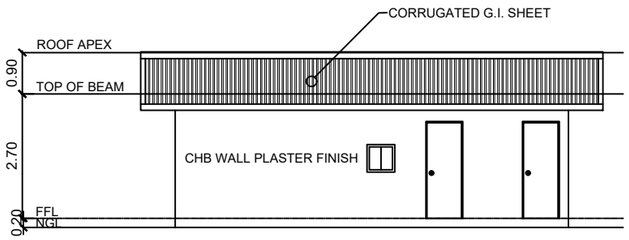

3 A-4 REAR ELEVATION
SCALE 1:75 M.

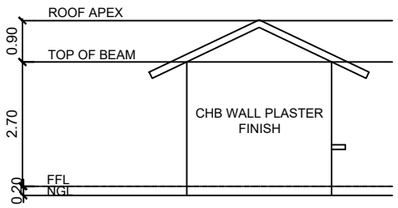

3 A-5 LEFT ELEVATION
SCALE 1:75 M.

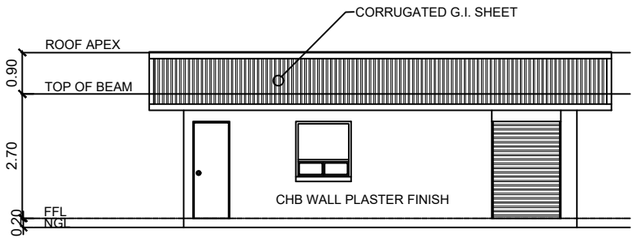

5 A-4 FRONT ELEVATION
SCALE 1:75 M.

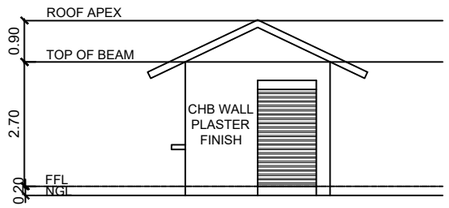

6 A-4 RIGHT ELEVATION
SCALE 1:75 M.

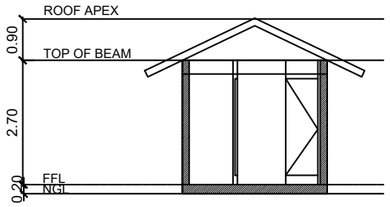

7 A-4 CROSS SECTION
SCALE 1:75 M.

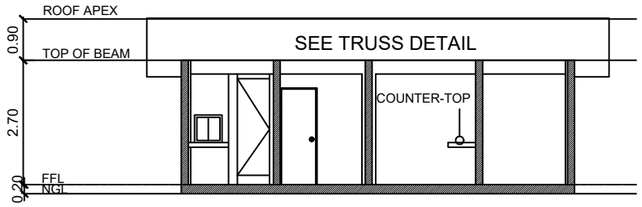

8 A-4 LONGITUDINAL SECTION
SCALE 1:75 M.

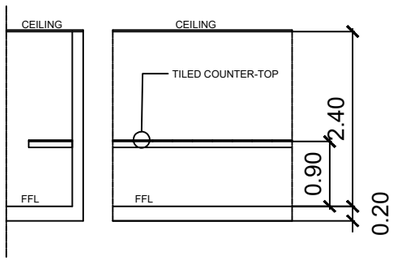

COUNTER-TOP DETAIL

THESE DRAWINGS ARE THE SOLE PROPERTY OF THE ARCHITECT. NO COPIES, SIMILAR REPRODUCTIONS, ALTERATIONS AND/OR REVISIONS OF ANY KIND ARE TO BE DONE, IN PART OR IN WHOLE TO ANY OF THESE DOCUMENTS, W/O CONSENT FROM THE ARCHITECT.

ENGINEER	PRC. NO. 057713	PROJECT TITLE	OWNER	APPROVED BY	APPROVED BY	NO.	REVISIONS	DATE	SHEET CONTENT	PROJECT NO.
BENITO J. MONTEALTO		Swine AI Sa Barangay (SWAIB) Project			DR. RUTH MICLAT-SONACO PROGRAM DIRECTOR NATIONAL LIVESTOCK PROGRAM				AS SHOWN	SHEET NO. A 4
PTR. NO. 6063117	DATE MAY 15, 2022	LOCATION :	ADDRESS :							
TIN 125-495-951	PLACE LIPA CITY									