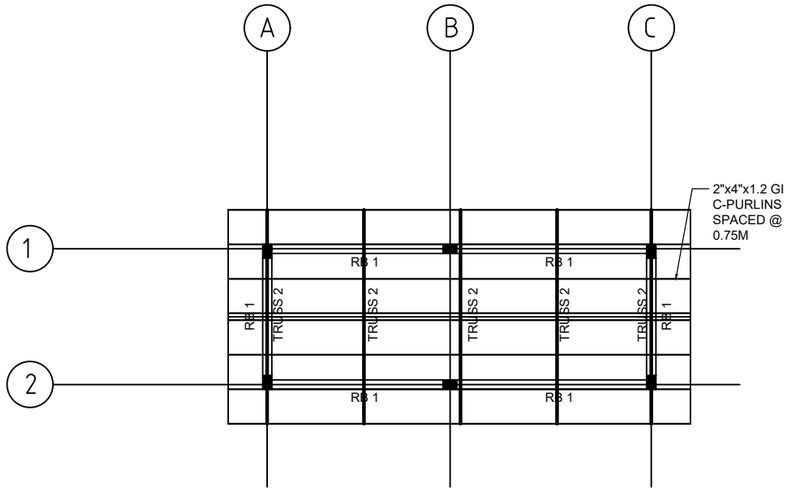

2 S-2 ROOF FRAMING PLAN

SCALE 1:75 M.

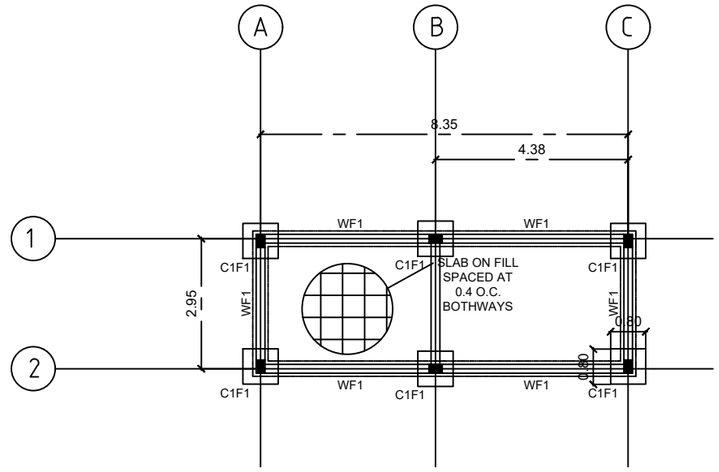

1 S-2 FOUNDATION PLAN

SCALE 1:75 M.

SCHEDULE OF FOOTING					SCHEDULE OF COLUMN				
MARK	SIZE A	X	SIZE B	THICKNESS	REBARS	MARK	SIZE L	X	SIZE W	REBARS	TIES
F-1	0.80	X	0.80	0.30	5 - 12 mm Ø BOTHWAYS	C-1	0.20		0.30	4- 12 mm Ø	10 mm. Ø @ 0.20 m.
WF	0.40	X	CONT.	0.10	3 - 10 mm Ø BOTHWAYS						

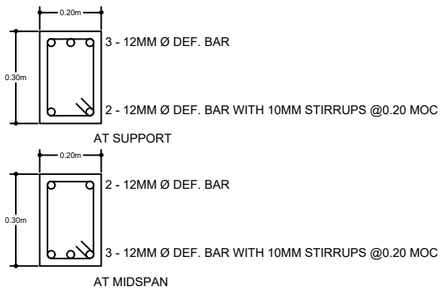

3 S-2 ROOF BEAM DETAILS

SCALE 1.10 M.

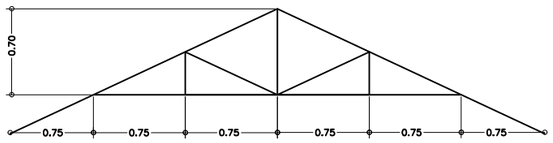

4 S-2 TRUSS 2 DETAILS

SCALE 1.10 M.

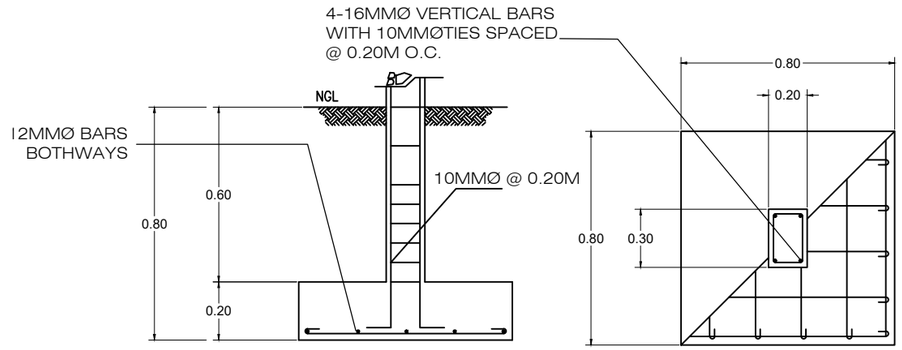

5 S-2 COLUMN AND FOOTING DETAIL

SCALE 1:75 M.

THESE DRAWINGS ARE THE SOLE PROPERTY OF THE ARCHITECT. NO COPIES, SIMILAR REPRODUCTIONS, ALTERATIONS AND/OR REVISIONS OF ANY KIND ARE TO BE DONE, IN PART OR IN WHOLE TO ANY OF THESE DOCUMENTS, W/O CONSENT FROM THE ARCHITECT.

ENGINEEER: BENITO J. MONTEALTO
PRC. NO. 057713
PTR. NO. 6063117
DATE MAY 15, 2022
TIN 125-495-951
PLACE LIPA CITY

PROJECT TITLE: Swine AI Sa Barangay (SWAIB) Project
LOCATION :
OWNER
ADDRESS :
APPROVED BY
APPROVED BY: DR. RUTH MICLAT-SONACO
PROGRAM DIRECTOR
NATIONAL LIVESTOCK PROGRAM

NO.	REVISIONS	DATE

SHEET CONTENT: AS SHOWN
PROJECT NO.
SHEET NO. S 2