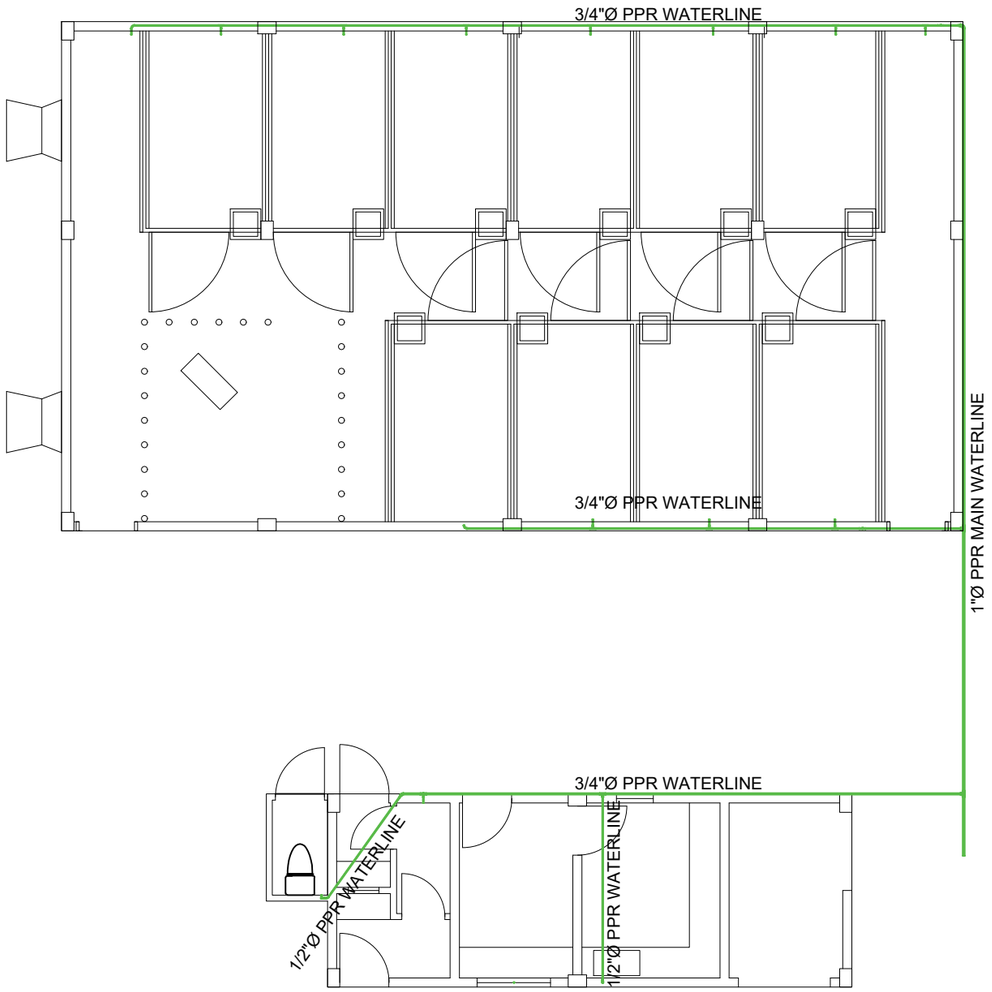

1 P-1 WATERLINE PLUMBING LAYOUT

SCALE 1:75 M.

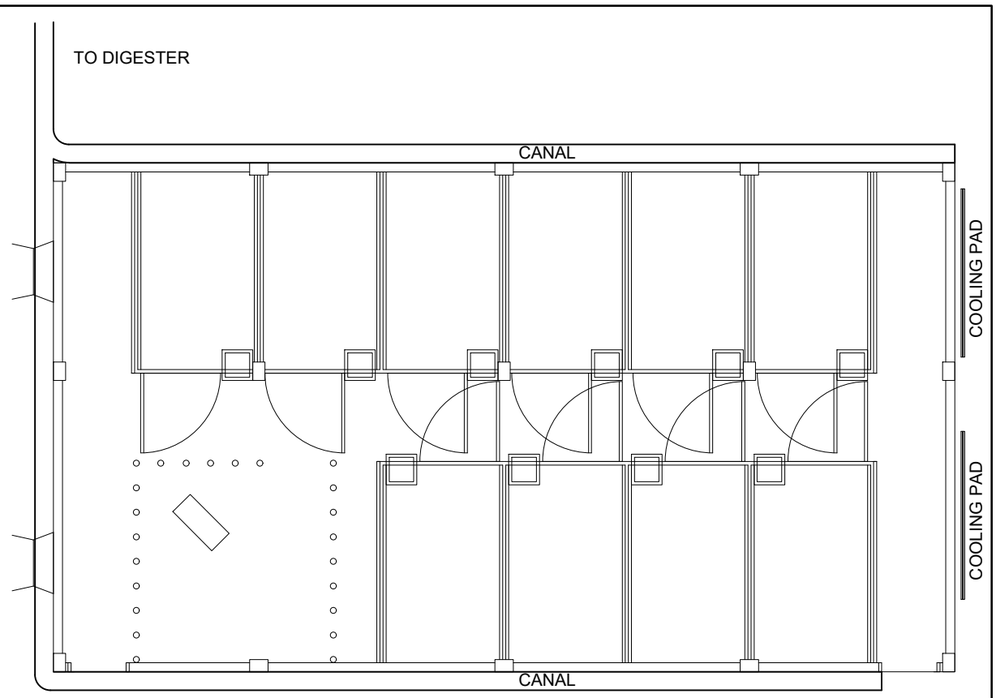

2 P-2 SEWERLINE LAYOUT

SCALE NTS

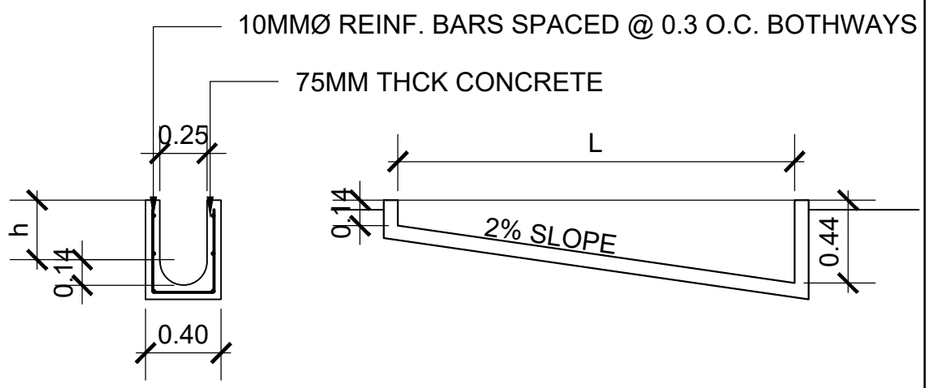

3 P-1 CANAL DETAILS

SCALE NTS

THESE DRAWINGS ARE THE SOLE PROPERTY OF THE ARCHITECT. NO COPIES, SIMILAR REPRODUCTIONS, ALTERATIONS AND/OR REVISIONS OF ANY KIND ARE TO BE DONE, IN PART OR IN WHOLE TO ANY OF THESE DOCUMENTS, W/O CONSENT FROM THE ARCHITECT.

ENGINEEER	PRC. NO.	PROJECT TITLE	OWNER	APPROVED BY	APPROVED BY	NO.	REVISIONS	DATE	SHEET CONTENT	PROJECT NO.
		Swine AI Sa Barangay (SWAIB) Project			DR. RUTH MICLAT-SONACO PROGRAM DIRECTOR NATIONAL LIVESTOCK PROGRAM				AS SHOWN	SHEET NO. P 1
PTR. NO.	DATE	LOCATION :	ADDRESS :							
TIN	PLACE									