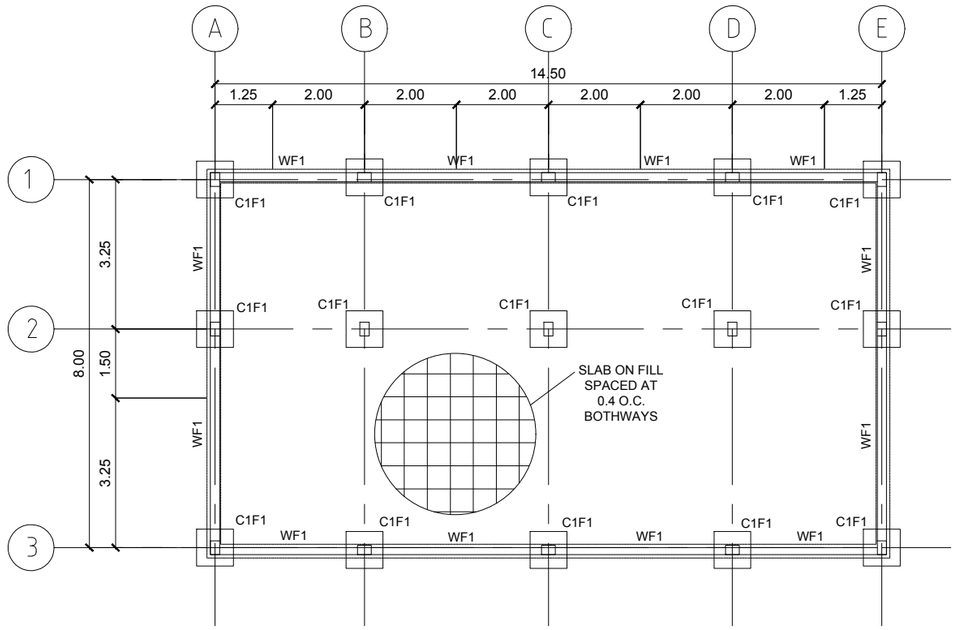

1 S-1 FOUNDATION PLAN
SCALE 1:75 M.

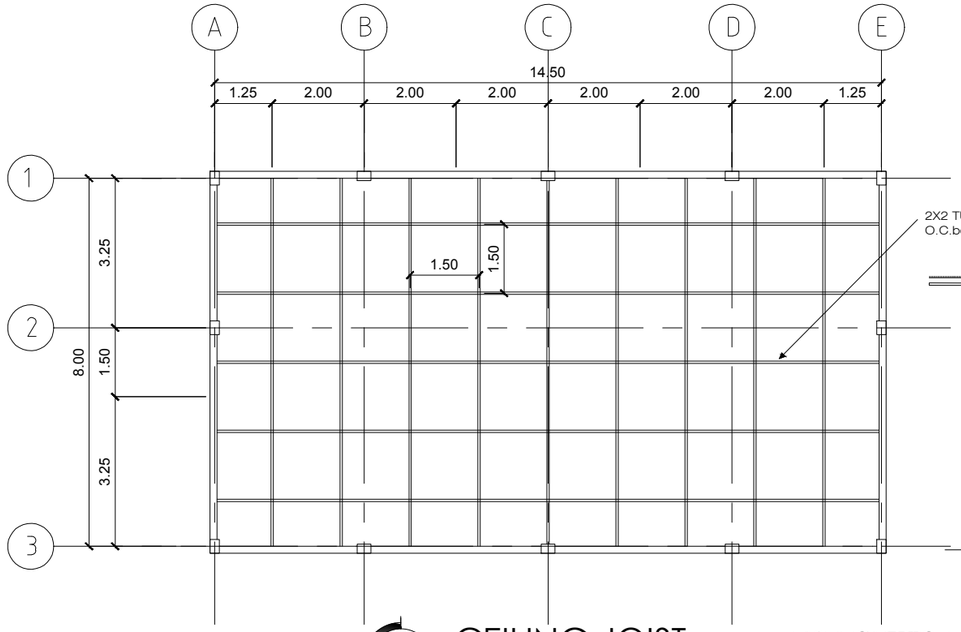

3 S-1 CEILING JOIST
SCALE 1:75 M.

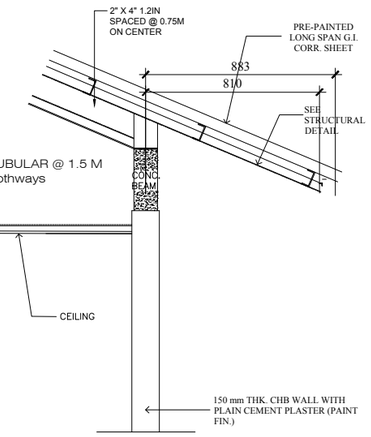

4 S-1 BAY SECTION
SCALE NTS.

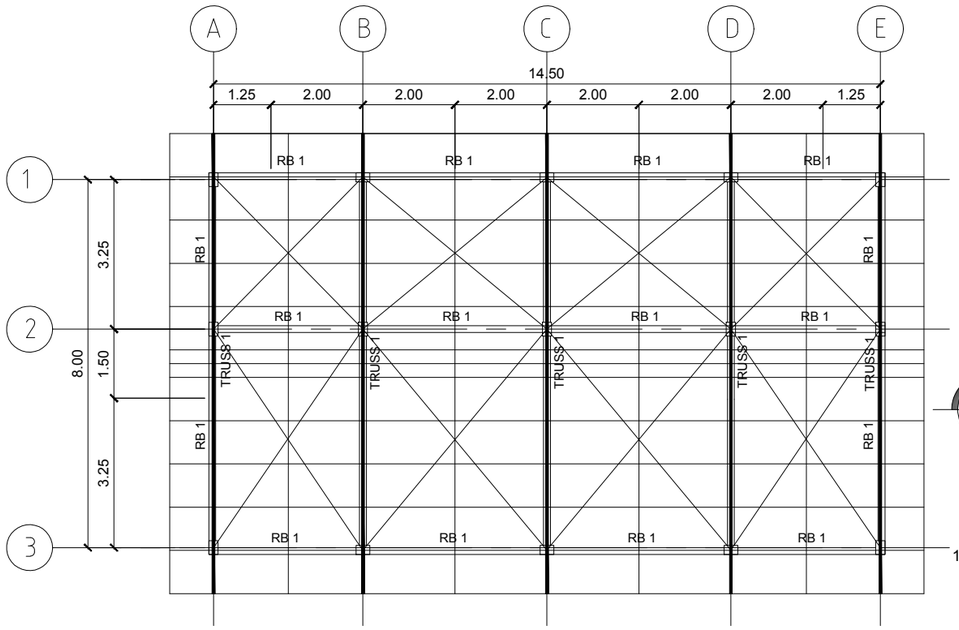

2 S-1 ROOF FRAMING PLAN
SCALE 1:75 M.

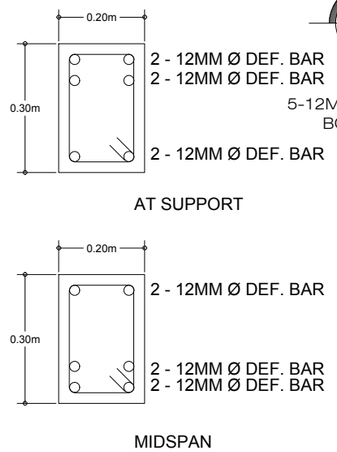

5 S-1 ROOF BEAM DETAILS
SCALE 1.10 M.

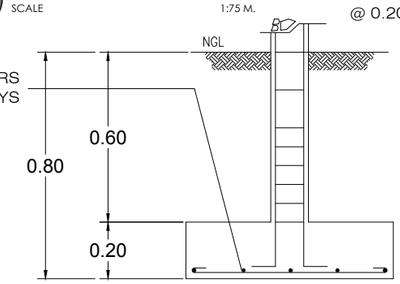

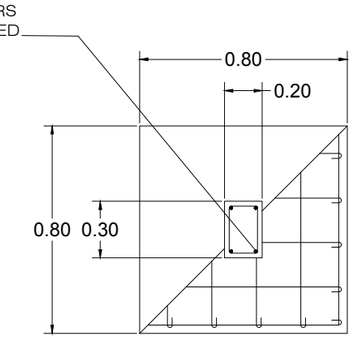

C1F1

6 S-1 COLUMN AND FOOTING DETAIL
SCALE 1:75 M.

TOP BAR - 2 1/2" X 2 1/2" X 1/2" ANGULAR BAR
BOTTOM BAR - 2 1/2" X 2 1/2" X 1/2" ANGULAR BAR
MEMBERS - 2" X 2" X ¼" ANGULAR BAR
PURLINS - 2" X 3" X 1.2MM GI PURLIN

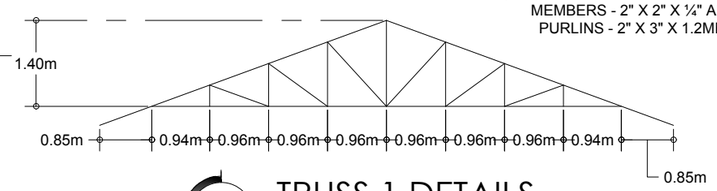

7 S-1 TRUSS 1 DETAILS
SCALE 1.10 M.

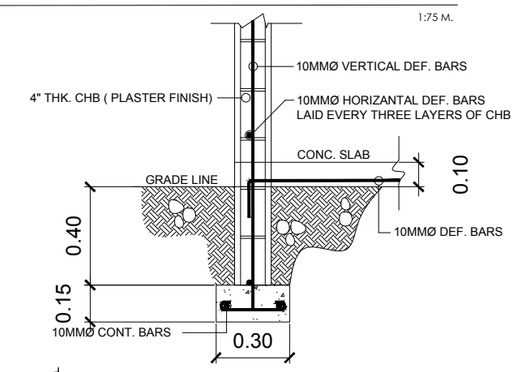

1 A-1 WALL FOOTING DETAIL
SCALE 1:40 M.

THESE DRAWINGS ARE THE SOLE PROPERTY OF THE ARCHITECT. NO COPIES, SIMILAR REPRODUCTIONS, ALTERATIONS AND/OR REVISIONS OF ANY KIND ARE TO BE DONE, IN PART OR IN WHOLE TO ANY OF THESE DOCUMENTS, W/O CONSENT FROM THE ARCHITECT.

ENGINEEER	PRC. NO. 057713	PROJECT TITLE	OWNER	APPROVED BY	APPROVED BY
BENITO J. MONTEALTO		Swine AI Sa Barangay (SWAIB) Project			DR. RUTH MICLAT-SONACO PROGRAM DIRECTOR NATIONAL LIVESTOCK PROGRAM
PTR. NO. 6063117	DATE MAY 15, 2022	LOCATION :	ADDRESS :		
TIN 125-495-951	PLACE LIPA CITY				

NO.	REVISIONS	DATE

SHEET CONTENT	PROJECT NO.
AS SHOWN	SHEET NO. S 1